LCG-400-01/02

NTSC PATTERN GENERATORS

SERVICE MANUAL

****

NOTE

These servicing instructions are for use by qualified personnel only. To avoid electrical shock, do not perform any servicing other than that contained in the service manual unless you are qualified to do so.

****

1st edition Apr, 1986

CONTENTS

	Page
1. SPECIFICATIONS	4
2. TEST EQUIPMENT REQUIRED	5
3. CALIBRATION PROCEDURE	6
3.1 General	6
3.2 Initial control Settings	6
3.3 Power Supply	7
3.4 RF Modulator/1kHz oscillator	7
(1) Sound Level Adjustment	7
(2) Deviation Adjustment	7
(3) Modulation Adjustment	7
(4) Carrier Frequency Adjustment	7
3.5 Rear Panel Output Signals	8
(1) Subcarrier Adjustment	8
(2) Black Burst	8
(3) Amplitude and Timing Check	8
3.6 Video Output	9
(1) Subcarrier Balance Adjustment	9
(2) Output Level Adjustment	9
(3) Timing Check	10
3.7 Alignment Pattern	11
(1) Circle Pattern Adjustment	11
3.8 Gen Lock	12
(1) H SYNC Symmetry Adjustment	12
(2) VCO Adjustment	12
(3) Subcarrier Symmetry Adjustment	12
(4) Indicator Lamp Check	12
(5) Horizontal Delay Check	13
3.9 Staircase Signal	13
(1) Amplitude Checking	13
3.10 Video Swemar Unit(400-01)	14
(1) Amplitude Adjustment	14
(2) Sawtooth Adjustment	14
(3) Frequency Adjustment-1(High end)	14
(4) Frequency Adjustment-2(Low end)	15
(5) Marker Frequency Check	15
3.11 Multiburst Unit(400-02)	15
(1) Offset Adjustment	15
(2) Amplitude Adjustment	16
(3) Frequency Adjustment	16

Page

4. TROUBLESHOOTING PROCEDURE 17
4.1 Troubleshooting Aid-1 17
4.2 Troubleshooting Aid-2 17
(1) Main Frame 18
(2) Swemar Unit 23
(3) Multiburst Unit 24

5. ADJUSTMENT LOCATIONS 25
Top view 25
Bottom view 26

6. PRINTED CIRCUIT BOARD 27
T-1950 Main Board 27
T-1951 Power Supply Board 29
T-1952 Amplifier Board 30
T-1953 Control Board 31
T-1954 PRESET Board 31
T-1955 Control Board 31
T-1956 RF Modulator Board 32
T-1957 Gen Lock Board 33
T-1958 Swemar Board 34
T-1959 Multiburst Board 35
T-1960 Sweep Control Board 36
T-2002 Multiburst Preset Board 36

7. BLOCK DIAGRAM 37

8. SCHEMATIC DIAGRAM 38
Main Frame 38
Line Sync Counter 38
Field Driver & Field Sync Generator 39
Line Pattern Counter 40
Field Pattern Counter 41
Pattern Generator 42
Circle Pattern 43
Luminance Generator, Chroma Adder, Output Amplifier 44
Field Reset Generator 45
Chrominance Generator 46
Subcarrier Generator, Subcarrier Phase 47
Gen Lock Input Amplifier 48
Composite Sync, Trigger Scope, Composite Blanking, Subcarrier Amplifier 49
Black Burst 50

Page

AF 1kHz Oscillator, 4.5MHz FM Generator 51
RF Modulator 52
Panel Controls 53
Power Supply 54

Swemar Unit(400-01) 55
Sweep Oscillator 55
Sine Wave Amplifier 56
Marker Generator 57
Sweep oscillator Driver, Luminance Generator 58
Panel Controls 59

Multiburst Unit(400-02) 60
Multiburst Oscillator 60
Sine Wave Amplifier 61
Multiburst Control 62

9. PARTS LIST 63
Main Frame 63
Swemar Unit(400-01) 73
Multiburst Unit(400-02) 75

10. CABINET REMOVAL 79

1. SPECIFICATIONS

System	NTSC-M
Patterns	
a) EIA Color Bar	EIA standard RS-189A 75% Amplitude 100% Saturated Color Bar Gray (75% White), Yellow, Cyan, Green, Magenta, Red, Blue -I, 100% White, Q and Black
b) Full Field Color Bar	75% Amplitude 100% Saturated Color Bar Gray (75% White), Yellow, Cyan, Green, Magenta, Red, Blue, Black
c) Stair Case	5 Step
d) Raster	8 Colors — Red, Green and Blue (Combined) White (100% and 75%) Yellow, Cyan, Green, Magenta, Red, Blue and Black
e) Window	White window on black background
f) Convergence	Cross Hatch 17 x 13 Dot 16 x 12 and Center
g) Alignment	Cross Hatch 9 x 7 Circle Corner Marker
h) Multiburst Frequency *LCG-400-02 only*	0.5, 1.5, 2.0, 3.0, 3.58, 4.2 MHz (± 3% Adjustable)
Reference Level	100% White at left end of burst
Amplitude	50% and 100%
Flatness	± 1 dB
i) Video Sweep *LCG-400-01 only*	
Frequency Range	50 kHz - 7 MHz
Sweep Rate	Synchronized with Field
Amplitude	50%, 100% fixed and 0 - 100% variable
Flatness	± 1 dB
Markers Frequency	0.5, 1.0, 2.0, 3.58, 4.5 MHz
SYNC Signal	EIA Standard RS-170A
Scanning System	Interlace, Progressive
No. of Scanning lines	Interlace 525 Progressive 262
Line Frequency	15.734 kHz
Field Frequency	Interlace 59.94 Hz Progressive 60.05 Hz

Gen-Lock	Synchronized to Video Signal Input
Horizontal Delay	± 4 μS continuously variable
Sub-Carrier Phase	0 - 360° continuously variable
Sound	Intercarrier System F3 (FM)
Carrier Frequency	4.5 MHz
Int. Mod	1 kHz Sine Wave
1 KHz Output	3 V (p-p)
Output Impedance	600 Ohms
Ext Mod	
Frequency	50 Hz - 10 KHz
Input Voltage	3 V (p p)
Input Impedance	600 Ohms
Pre-Emphasis	No
Composite Video Output	
Polarity	Negative Sync
Voltage	1 V fixed 0 - 1V Variable
Impedance	75 Ohms
Subcarrier Output	
Frequency	3.579545 MHz ± 5 Hz (0° - 40°C)
Voltage	2 V (p-p)
Impedance	75 Ohms
Black Burst Output	
Voltage	Sync Signal 286 mV Burst 286 mV
Impedance	75 Ohms
Scope Trigger Output	
Mode	Vertical, Horizontal, Frame
Voltage	4 V
Impedance	75 Ohms
RF Output	
Channel	CH-3 61.25 MHz ± 0.5% CH-4 67.25 MHz ± 0.5%
Power Supply	117/230 Vac, 50-60 Hz
Size	426 (w) x 132 (h) x 400 (d) mm 16¾ x 5¼ x 15¾ in
Accessory Supplied	Cable, BNC – Alligator Clip F – Alligator Clip

2. TEST EQUIPMENT REQUIRED

The following test equipment is required for calibration and servicing of the Model LCG-400-01/02. The suggested specifications are the minimum necessary for proper calibration of this instrument.

Test Equipment	Minimum Spec
- Multimeter	0 - 15V Accuracy < 1%
- Oscilloscope	Dual trace Delayed sweep 10mV sensitivity 50MHz bandwidth Low capacitance probe
- Frequency Counter	20mV sensitivity 80MHz bandwidth Accuracy < 0.1ppm
- Signal Generator	400Hz - 10MHz
- Video Signal Generator	LCG-400 or equivalent
- Video Monitor	NTSC System
- Terminator	75 ohm feedthrough
- Zero Beat Detector (400-01 only)	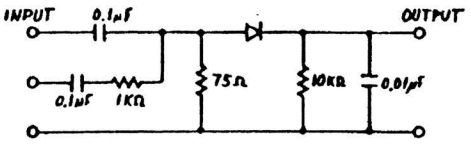

3. CALIBRATION PROCEDURE

3.1 General

Calibration should be performed after a 30 minute warm-up period. It should also be confirmed that the unit is connected to the rated power line voltage

All adjustment should be completed in the given order, because some adjustments interact with others.

During the adjustment procedure, remove the case only when necessary and replace immediately after making an adjustment. This will maintain all circuit at constant operating temperature.

3.2 Initial Control Settings

The initial control settings to be used for each check and adjustment are listed below. Any variations from these settings are stated in the applicable procedure.

- Main Frame	
SYNCHRONIZATION	INTERNAL
SCANNING	PROGRESSIVE
Pattern selector	EIA COLOR BAR on
WHITE	OFF
RED	OFF
GREEN	OFF
BLUE	OFF
BURST	OFF
LUMINANCE	OFF
CHROMINANCE	OFF
AMPLITUDE	FIXED
VARIABLE	MAX
SOUND	OFF
RF	OFF
SCOPE TRIGGER	V DRIVE
- SWEMAR UNIT (400-01)	
MARKER FREQUENCY	OFF
SWEEP START	LOW
SWEEP STOP	HIGH
SWEEP SIGNAL LEVEL	100%
VARIABLE	MAX
- MULTIBURST UNIT (400-02)	
MULTIBURST	OFF
AMPLITUDE	100%
BURST FREQUENCY PRESET	All OFF

3.3 Power Supply

- Connect the DC voltmeter between test point and chassis.

- Check the voltage according to Table 3-1.

Test point	Voltage	Tolerance
P956 pin2	-15V	-14.25V to -15.75V
P956 pin5	+15V	+14.25V to +15.75V
P956 pin3	+5V	+4.75V to +5.25V
P951 pin3	+5V	+4.75V to +5.25V

Table 3-1

3.4 RF Modulator/1kHz Oscillator

(1) Sound Level Adjustment

- set: SOUND INTERNAL 1kHz

- Connect the oscilloscope to INTERNAL OUT connector.

- Adjust VR802 for a 1kHz output level of 3Vp-p within 0.2V.

(2) Deviation Adjustment

- Connect the oscilloscope to the junction of C819 and R810 (T-1956).

- Adjust VR801 for a 1kHz level of 1Vp-p within 0.1V.

- Set: SOUND OFF

- Connect the oscilloscope to + lead of C802(T-1956).

- Adjust L801 for a DC level of +2V.

(3) Modulation Adjustment

- Connect the DC voltmeter between TP1 and TP2(T-1956).

- Adjust VR851 for a voltage reading of 2.15V.

(4) Cannel Frequency Adjustment

- Connect the frequency counter to RF OUTPUT connector.

- Depress one of the unlatched pattern selection button slightly, so that the latch is released and all pattern selection buttons are out.

- Set: CHANNEL CH-3*

- Adjust VC852 for a frequency reading of 61.25MHz*.

- Set: CHANNEL CH-4*

- Adjust VC851 for a frequency reading of 67.25MHz*.

- NOTE *: RF CHANNEL and frequency of the earlier models are
  CH-5 77.25MHz
  CH-6 83.25MHz

3.5 Rear-Panel Output Signals

(1) Subcarrier Adjustment

- Set: INTERNAL SYNCHRONIZATION ON

- Connect the oscilloscope to SUBCARRIER connector via 75 ohm terminator.

- Adjust VC701 for maximum output level. It should be at equal to or greater than 2Vp-p.

- Connect the frequency counter to SUBCARRIER connector.

- Adjust VC402 for a frequency reading of 3.579545MHz within 1Hz.

(2) Black Burst

- Connect the CH-1 INPUT of the oscilloscope to BLACK BURST connector via 75 ohm terminator.

- Check for a setup level of 54mV within 10mV(no adjustment).

- Adjust VR752 for a sync level of 290mVp-p within 20mV.

- Adjust VR751 for a burst level of 290mVp-p within 20mV.

(3) Amplitude and Timing Check

- Check BLACK BURST, COMPOSITE SYNC, COMPOSITE BLANKING and BURST FLAG for the amplitude and relative timing values shown in Figure 3-1. Use CH-2 INPUT of the oscilloscope to check above signals.

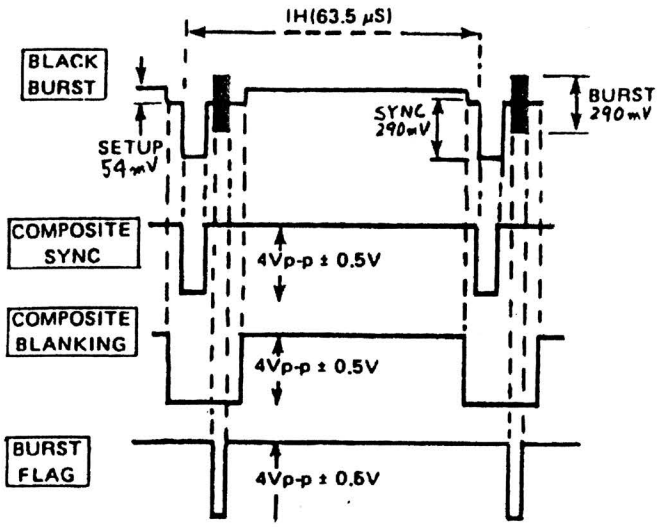

Figure 3-1

3.6 Video Output

(1) Subcarrier Balance Adjustment

- Set:

Pattern selector	EIA COLOR BAR
WHITE	ON
RED	ON
GREEN	ON
BLUE	ON
BURST	ON
LUMINANCE	ON
CHROMINANCE	ON
AMPLITUDE	FIXED

- Connect the oscilloscope to COMPOSITE VIDEO OUTPUT connector via 75 ohm terminator.

- Set the oscilloscope controls to view horizontal blanking.

- Adjust VR301 and VR303 for minimum subcarrier leakage on the pedestal line.

(2) Output Level Adjustment

- Check and adjust SYNC, BURST, SETUP, LUMINANCE and CHROMINANCE levels using the front-panel screwdriver controls as shown in Figure 3-2.

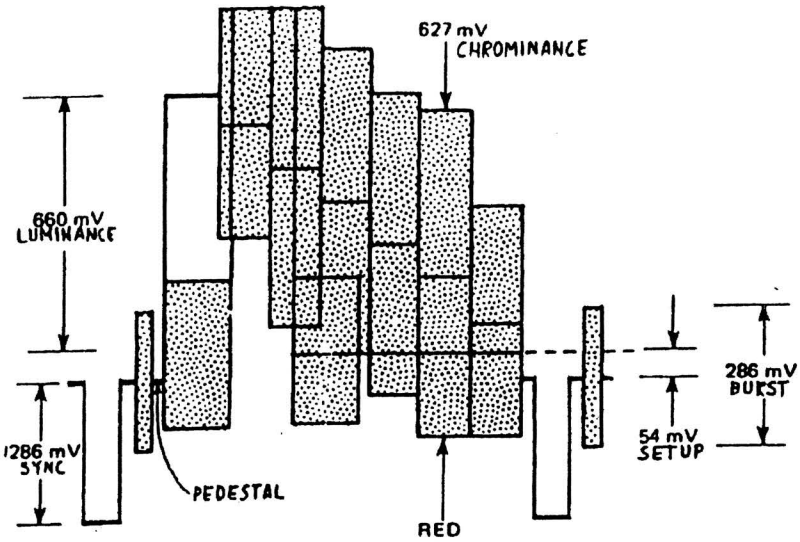

Figure 3-2

(3) Timing Check

- Check horizontal and vertical blanking intervals for timing intervals as shown in Figure 3-3.

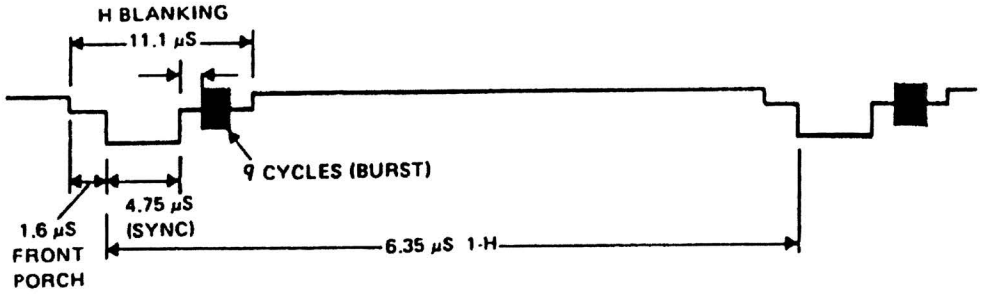

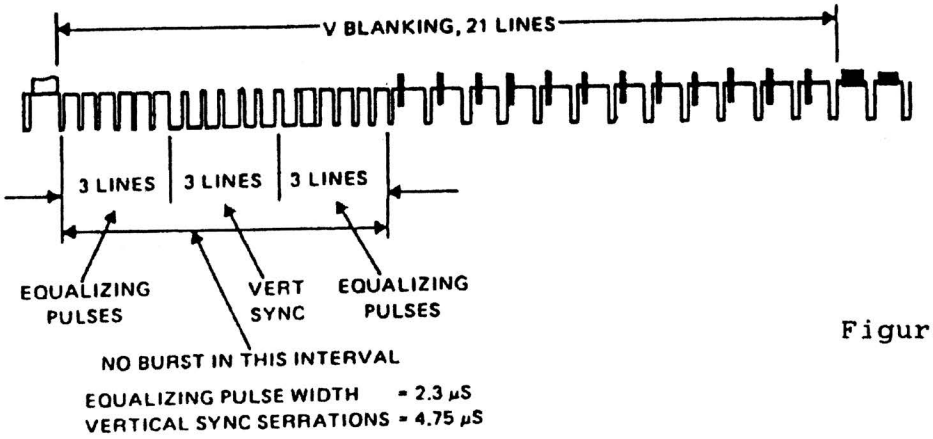

Figure 3-3

3.7 Alignment Pattern

(1) Circle Pattern Adjustment

- Set: Pattern selector ALIGNMENT

- Connect the video monitor to COMPOSITE VIDEO OUTPUT connector. Use 75 ohm terminator if necessary.

- Adjust VR50 and VR53 to center the circle horizontally and vertically on the center cross of the crosshatch pattern as shown in Figure 3-4.

- Adjust VR51 for a perfect circle as shown in Figure 3-4.

- Adjust VR52 for the circle size as shown in Figure 3-4.

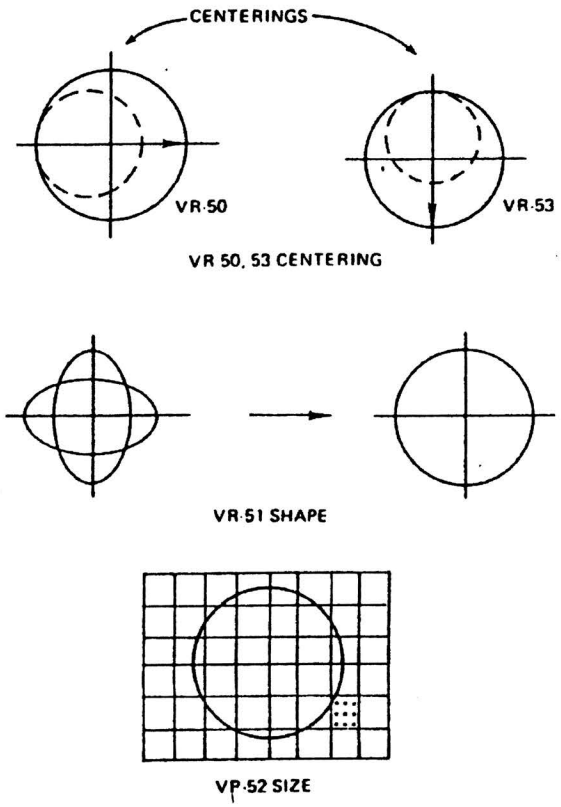

Figure 10-8.

Figure 3-4

3.8 Gen Lock

- Set: SYNCHRONIZATION GEN LOCK

- Apply 1Vp-p composite video signal from the reference video signal generator, via 75 ohm terminator, to the GEN LOCK connector on the rear panel.

(1) H SYNC Symmetry Adjustment

- Connect the oscilloscope to pin 5 of IC635(T-1950). Use low capacitance probe.

- Adjust VR401 for a symmetrical square wave.

(2) VCO Adjustment

- Connect the DC voltmeter to the junction of R412 and C403(T-1950).

- Adjust VC401 for a voltage reading of +5V within 1V.

- Use dual trace oscilloscope triggered from EXT TRIG IN and confirm that the LCG-400 is gen locked to the source.

(3) Subcarrier Symmetry Adjustment

- Connect the oscilloscope to pin 5 of IC635. Use low capacitance probe.

- Adjust VR402 for a symmetrical square wave.

(4) Indicator Lamp Check

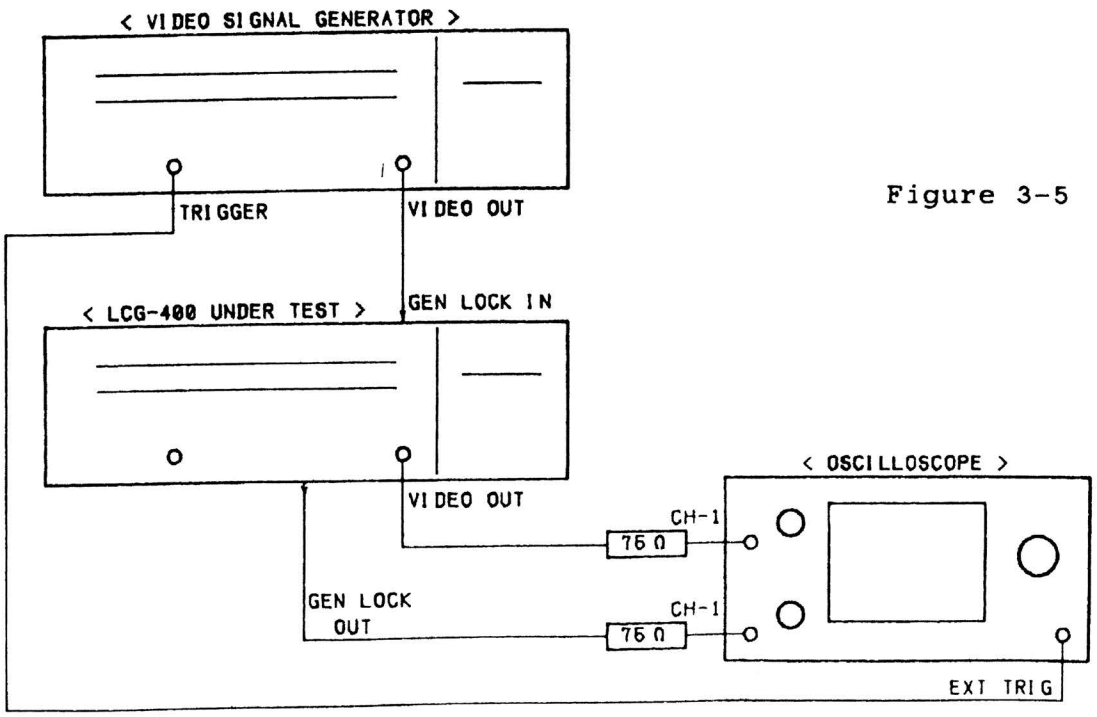

Figure 3-5

- Set the video output level of reference video signal generator to 0.5Vp-p.

- Confirm that the SYNC ABSENT and BURST ABSENT LEDs of the LCG-400 under test are extinguished.

(5) Horizontal Delay Check
- Setup: Refer to Figure 3-5.

- Turn the HORIZONTAL DELAY control to both extremes.

- Confirm that the advance and delay range is at least +,- 4uS.

3.9 Staircase Signal
(1) Amplitude Checking
- Set: LUMINANCE ON
  CHROMINANCE OFF
  AMPLITUDE FIXED

- Connect the oscilloscope to COMPOSITE VIDEO OUTPUT connector via 75 ohm terminator

- Check for a top-step level of 100% (714mV within 30mV measured from blanking level) as shown in Figure 3-6.

- Set: CHROMINANCE ON

- Check for a peak-to-peak subcarrier level of 290mVp-p within 20mV at the top-step as shown in Figure 3-6.

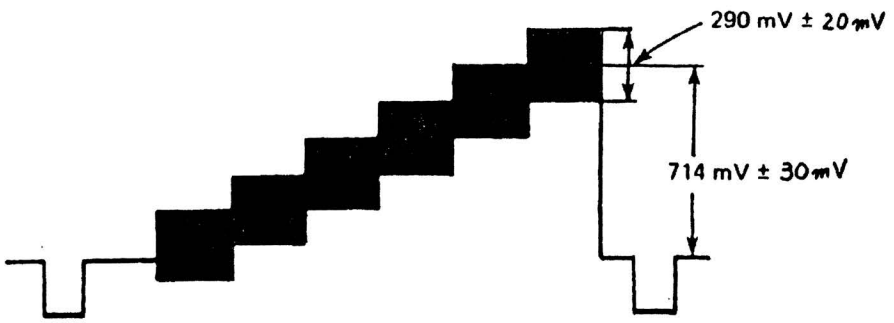

Figure 3-6

3.10 Video Swemar Unit(400-01)

(1) Amplitude Adjustment

- Set: Pattern selector UNIT
  SWEEP SIGNAL LEVEL 100%
  SWEEP START LOW
  SWEEP STOP LOW

- Connect the oscilloscope to the junction of R159 and R160 (T-1958). Use low capacitance probe.

- Adjust VR1 for equal signal excursions above and below zero.

- Connect the oscilloscope to COMPOSITE VIDEO output connector via 75 ohm terminator.

- Adjust VR101 so that the peak-to-peak amplitude of the sweep signal is 660mV.

(2) Sawtooth Adjustment

- Set: SWEEP START LOW
  SWEEP STOP HIGH

- Connect the oscilloscope to IC402 pin 1(T-1958). Use low capacitance probe.

- Adjust VR403 so that the positive peak of the sawtooth remains at the same DC level as the SWEEP START control is varied throughout its range.

- With the same setup as used above step, adjust VR402 so that the positive peak of the sawtooth stays at the same DC level as the SWEEP START control is varied throughout this range.

(3) Frequency Adjustment-1 (High end)

- Setup

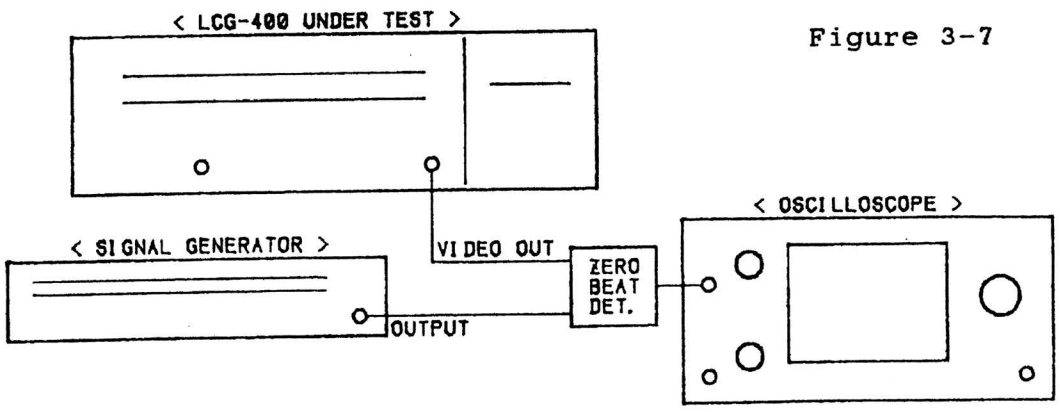

Figure 3-7

- Set: SWEEP START LOW
  SWEEP STOP HIGH

- Adjust VR401 so that the zero beat at 7MHz is visible at the end of the sweep.

(4) Frequency Adjustment-2 (Low end)
- Set: SWEEP START LOW
  SWEEP STOP LOW

- Set the oscilloscope to view CH-1 only. Re-adjust trigger controls if necessary for a stable sweep signal.

- Adjust VR404 for a sweep frequency of 40kHz(25uS in one cycle).

(5) Marker Frequency Check
- Setup: Refer to Figure 3-7

- Set: MARKER FREQUENCY All ON
  SWEEP START LOW
  SWEEP STOP HIGH

- Observe the zero beat and adjust the signal generator to each marker frequency. The exact marker frequency corresponds to the leading edge of the dropout.

3.11 Multiburst unit(400-02)
(1) Offset Adjustment
- Set: Pattern selector UNIT
  MULTIBURST ON
  AMPLITUDE 100%

- Connect the oscilloscope to the junction of R159 and R160 (T-1959). Use low capacitance probe.

- Adjust VR1 and VR2 alternately so that the baseline(between bursts) is at zero and the bursts are symmetrical above and below zero.

(2) Amplitude adjustment

- Connect the oscilloscope to the COMPOSITE VIDEO OUTPUT connector via 75 ohm termination.

- Adjust VR101 for a peak-to-peak amplitude of 660mV.

(3) Frequency adjustment

- Connect the frequency counter to the INDIVIDUAL FREQUENCY OUTPUT connector.

- Activate each BURST FREQUENCY PRESET switch in sequence. Check and adjust each frequency burst using the front-panel screwdriver controls.

4. TROUBLESHOOTING PROCEDURE

4.1 Troubleshooting Aid-1

- Confirm that the any equipment used with the LCG-400-01/02 is operating correctly.

- Check all control settings, because an incorrect setting can make a good unit appear defective. If there is any question about the function, refer to the INSTRUCTION MANUAL for a correct operation.

- Check all circuit for visual defects such as broken component, loose connections of a connector, open wire, poor soldering etc.

- Some trouble can be solved with proper adjustment.

- Check the voltage, waveform and state of logic circuit as shown in the "8 SCHEMATIC DIAGRAM" to trace the defective circuit. Then, troubleshoot the associated circuit and/or the control circuit. Start with the power supply. Typical voltage and waveform are obtained under the same conditions as "3.1 Initial Control Settings".

4.2 Troubleshooting Aid-2

- The explanations for a following procedure are based on the front panel symptom and are assisted by schematic diagram.

- Page of the schematic diagram is shown as follows
  (x/17): Main frame
  (x/5) : Swemar unit
  (x/3) : Multiburst unit

Trouble	Check point & Probable Cause
(1) Main Frame	
No pattern appears	Check line fuse Check all Power supplies within tolerance according to Table 3-1(page 7). If the voltage is low, disconnect following connectors on the power supply board(T-1951), to isolate the Load from Power supply. P951: For main board(T-1950) P952: For RF modulator board(T-1956) P953: For swemar/multiburst unit board(T-1958/1959) P954: For amplifier board(T-1952) P955: For gen lock, main board(T-1950) If the voltage comes up, check the Load circuit. Voltage still low, check the Power supply. Three terminal regulator and electrolytic capacitor should be checked. Check waveform at pin 6 of P104(7/17) yes - Check Video amplifier(16/17), No - Chrominance adder(7/17) and associated circuit See SCOPE TRIGGER output, Rear panel output signal Check waveform at pin 13 of IC634(10/17) for 14MHz. If no, check x'tal oscillator
No SCOPE TRIGGER output H DRIVE	Check waveform at pin 12 of IC211(2/17) Yes - Scope trigger selector(2/17), Trigger amplifier(12/17) No - Line sync counter(1/17)
FRAME	Check waveform at pin 9 of IC211(2/17) Yes - Scope trigger selector(2/17), Trigger amplifier(12/17) No - Field divider, Field sync generator(2/17)

Trouble	Check point & Probable cause
V DRIVE	Check waveform at pin 1 of IC211(2/17) Yes - Scope trigger selector(2/17), Trigger amplifier(12/17) No - Field divider, Field sync generator(2/17)
No Rear panel output signal(Refer to Figure 3-1)	
SUBCARRIER	Check waveform at pin 5 of P702(12/17) Yes - Output amplifier(12/17) No - Subcarrier divider(9/17), 14MHz subcarrier generator(10/17)
BURST FLAG	Check waveform at pin 3 of P702(12/17) Yes - Output amplifier(12/17) No - Line sync counter(1/17)
COMPOSITE BLANKING	Check waveform at pin 2 of P702(12/17) Yes - Output amplifier(12/17) No - Field divider, Field sync generator(2/17)
COMPOSITE SYNC	Check waveform at pin 1 of P702(12/17) Yes - Output amplifier(12/17) No - Field divider, Field sync generator(2/17)
BLACK BURST	Check waveform at input circuit(13/17) Yes - Output amplifier(3/17) Adjust VR751, 752(Refer to CALIBRATION PROCEDURE 3.5 (2) No - Signal source for input circuit (12/17)
Subcarrier leak	Adjust VR301, 303. Refer to "CALIBRATION PROCEDURE 3.6 (1) Check balanced modulator(9/17)

Trouble	Check point & Probable cause
No Pattern selector works	
RASTER	
RED pattern	Check state of pin 3 of P502(5/17) for Lo when RED switch is on. Check S906 Check waveform at pin 6 of IC519(5/17) Yes - Chrominance D/A converter, Balanced modulator(9/17) No - Pattern generator and control circuit(5/17) Check waveform at pin 3 of IC512(5/17). Yes - Luminance D/A converter, Chrominance adder(7/17) No - Pattern generator and control circuit(5/17)
GREEN pattern	Check state of pin 2 of P501(5/17) for Lo when GREEN switch is on. Check S907 Check waveform at pin 8 of IC519(5/17). Yes - Chrominance D/A converter, Balanced modulator(9/17) No - Pattern generator and control circuit(5/17) Check waveform at pin 11 of IC512(5/17) Yes - Luminance D/A converter, Chrominance adder(7/17) No - Pattern generator and control circuit(5/17)
BLUE pattern	Check state of pin 1 of P501(5/17) for Lo when BLUE switch is on. Check S908 Check waveform at pin 11 of IC519(5/17) Yes - Chrominance D/A converter, Balanced modulator(9/17) No - Pattern generator and control circuit(5/17) Check waveform at pin 8 of IC512(5/17) Yes - Luminance D/A converter, Chrominance adder(7/17) No - Pattern generator and control circuit(5/17)

Trouble	Check point & Probable cause
Burst signal	Check state of pin 3 of P501(5/17) for Lo when BURST switch is on Yes - Chrominance D/A convertor, Balanced modulator(9/17) No - Panel control(16/17)
LUMINANCE pattern	Check state of pin 4 of IC518(5/17) for Lo when LUMINANCE switch is on Yes - Luminance D/A converter(7/17) No - Panel control(16/17)
CHROMINANCE	Check RED/GREEN/BLUE pattern
ALIGNMENT pattern	
Cross-hatch	Check waveform at pin 8 of IC310(3/17) Yes - Pattern generator(5/17) No - Line pattern counter(3/17) Check waveform at pin 10 of IC408(4/17) Yes - Pattern generator(5/17) No - Field pattern counter(4/17)
Corner marker	Check waveform at pin 6 of IC312(3/17) Yes - Pattern generator(5/17) No - Line pattern counter(3/17) Check waveform at pin 6 of IC406(4/17) Yes - Pattern generator(5/17) No - Field pattern counter(4/17)
CONVERGENCE pattern	
Dot	Check waveform at pin 5 of IC309(3/17) Yes - Pattern generator(5/17) No - Line Field pattern counter(3/17) Check waveform at pin 3 of IC407(4/17) Yes - Pattern generator(5/17) No - Field pattern counter(3/17)
Cross-hatch	Check waveform at pin 12 of IC310(3/17) Yes-Pattern generator(5/17) No -Line pattern counter(4/17) Check waveform at pin 1 of IC408(4/17) Yes-Pattern generator(5/17) No -Field pattern counter(4/17)

Trouble	Check point & Probable cause
Serration	Check waveform at pin 9 of IC307(3/17) Yes - Pattern generator(5/17) No - Line pattern counter(3/17) Check waveform at pin 8 of IC404(4/17) Yes - Pattern generator(5/17) No - Field pattern counter(4/17)
WINDOW pattern	Check waveform at junction of R10 and C2(3/17) Yes - Pattern generator(5/17) No - Line pattern counter(3/17) Check waveform at pin 3 of IC409(4/17) Yes - Pattern generator(5/17) No - Field pattern counter(4/17)
STAIRCASE pattern	Check waveform at pin 3 of IC513(5/17) Yes - Staircase generator (5/17), Luminance D/A converter(7/17) No - Composite blanking(7/17)
FULL FIELD pattern	Check RED/GREEN/BLUE pattern Check BURST signal Check balanced modulator(9/17)
EIA COLOR BAR	Check RED/GREEN/BLUE pattern
AMPLITUDE FIXED	Check S912 and associated circuit
AMPLITUDE PRESET does not work	Check PRESET board(T-1954)(16/17) and associated circuit Check Luminance D/A converter(7/17)
No GEN LOCKed	Setup: Refer to Figure 3-5. Check waveform at collector of Q655 (11/17) Yes - Phase shifter(10/17) No - Gen lock input amplifier(10/17) Check waveform at collector of Q660 (11/17) Yes - Phase shifter(10/17) No - Gen lock input amplifier(10/17)

Trouble	Check point & Probable cause
No SOUND output	Check waveform at pin 2 of P801(14/17) Yes - S901 and associated circuit (16/17) No - 1kHz oscillator(14/17)
No RF output	Check and adjust RF CHANNEL frequency Refer to "CALIBRATION PROCEDURE 3.4 (4). Check waveform at pin 3 of P852(15/17) for video signal Yes - RF modulator(5/17) No - Output amplifier(7/17)

(2) Swemar unit

No output signal	Check waveform at emitter of Q502(5/5) for swept signal Yes - Main frame No - Proceed as follows Check waveform at junction of P159 and 160(2/5). Yes - Level switch(2/5) No - Triangle amplifier(2/5), Sweep oscillator(1/5)
Sine wave distortion	Check sine wave shaper(2/5)
No sweep operation	Check waveform at collector of Q406(4/5) Yes - Sweep oscillator(1/5) No - Sweep oscillator driver(4/5)
No SWEEP START works	Check control voltage at pin 3 of IC401 (4/5) Adjust VR401-404(4/5) if necessary. Refer to CALIBRATION PROCEDURE 3.10 (2, 3, 4)
No SWEEP STOP works	Check control voltage at pin 6 of IC401 (4/5) Adjust VR401-404(4/5) if necessary. Refer to CALIBRATION PROCEDURE 3.10 (2, 3, 4)

Trouble	Check point & Probable cause
No marker output	
No markers appear	Check IC209(3/5) and associated circuit
0.5MHz	Check IC211B, 209, S201A
1.0MHz	Check IC211A, 209, S201B
2.0MHz	Check IC212B, 209, S201C
3.58MHz	Check IC212A, 209, S201D
4.5MHz	Check IC213B, 209, S201E

(3) Multiburst unit

No output signal	Check waveform at pin 3 of P101(2/3) for multiburst signal Yes - Main frame No - Proceed as follows Check waveform at junction of P159 and 160(2/3) Yes - Level switch(2/3) No - Triangle amplifier, Multiburst oscillator
No burst signal (Continuous signal comes out)	Check cycle counter(3/3) Check waveform at pin 3 of IC1(1/3) for stair case.
No IND FREQ OUTPUT	
0.5MHz	Check IC214A, Q203, S202
1.0MHz	Check IC214D, Q204, S203
2.0MHz	Check IC214B, Q205, S204
3.58MHz	Check IC21/A, Q206, S205
4.5MHz	Check IC207C, Q207, S206

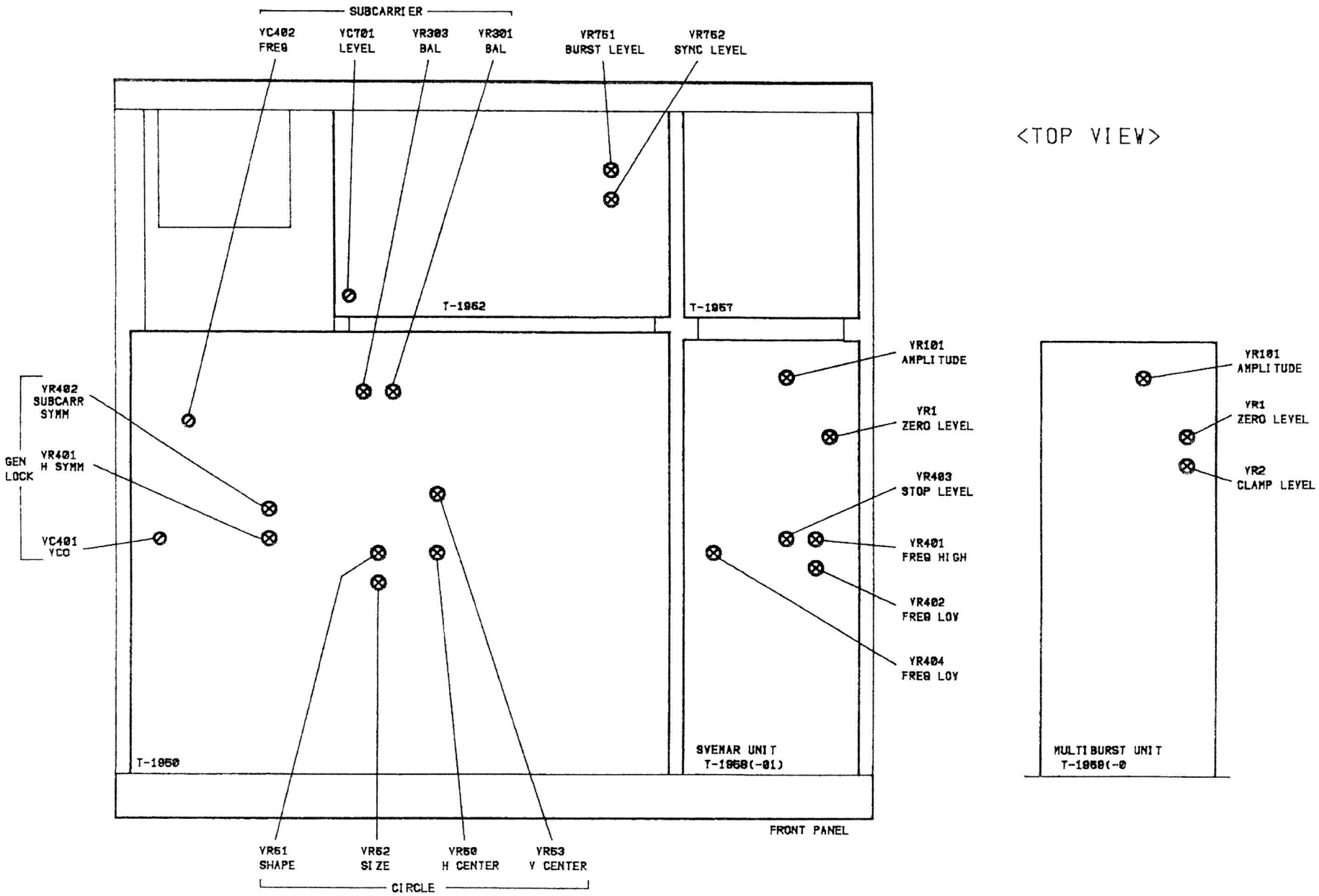
SUBCARRIER
VC402 FREQ
VC701 LEVEL
VR303 BAL
VR301 BAL
VR751 BURST LEVEL
VR752 SYNC LEVEL
<TOP VIEW>
T-1962
T-1957
T-1950
VR101 AMPLITUDE
VR1 ZERO LEVEL
VR403 STOP LEVEL
VR401 FREQ HIGH
VR402 FREQ LOW
VR404 FREQ LOW
SVEMAR UNIT T-1958(-01)
VR402 SUBCARR SYMM
GEN LOCK
VR401 H SYMM
VC401 VCO
VR51 SHAPE
VR52 SIZE
VR50 H CENTER
VR53 V CENTER
CIRCLE
FRONT PANEL
VR101 AMPLITUDE
VR1 ZERO LEVEL
VR2 CLAMP LEVEL
MULTIBURST UNIT T-1959(-0

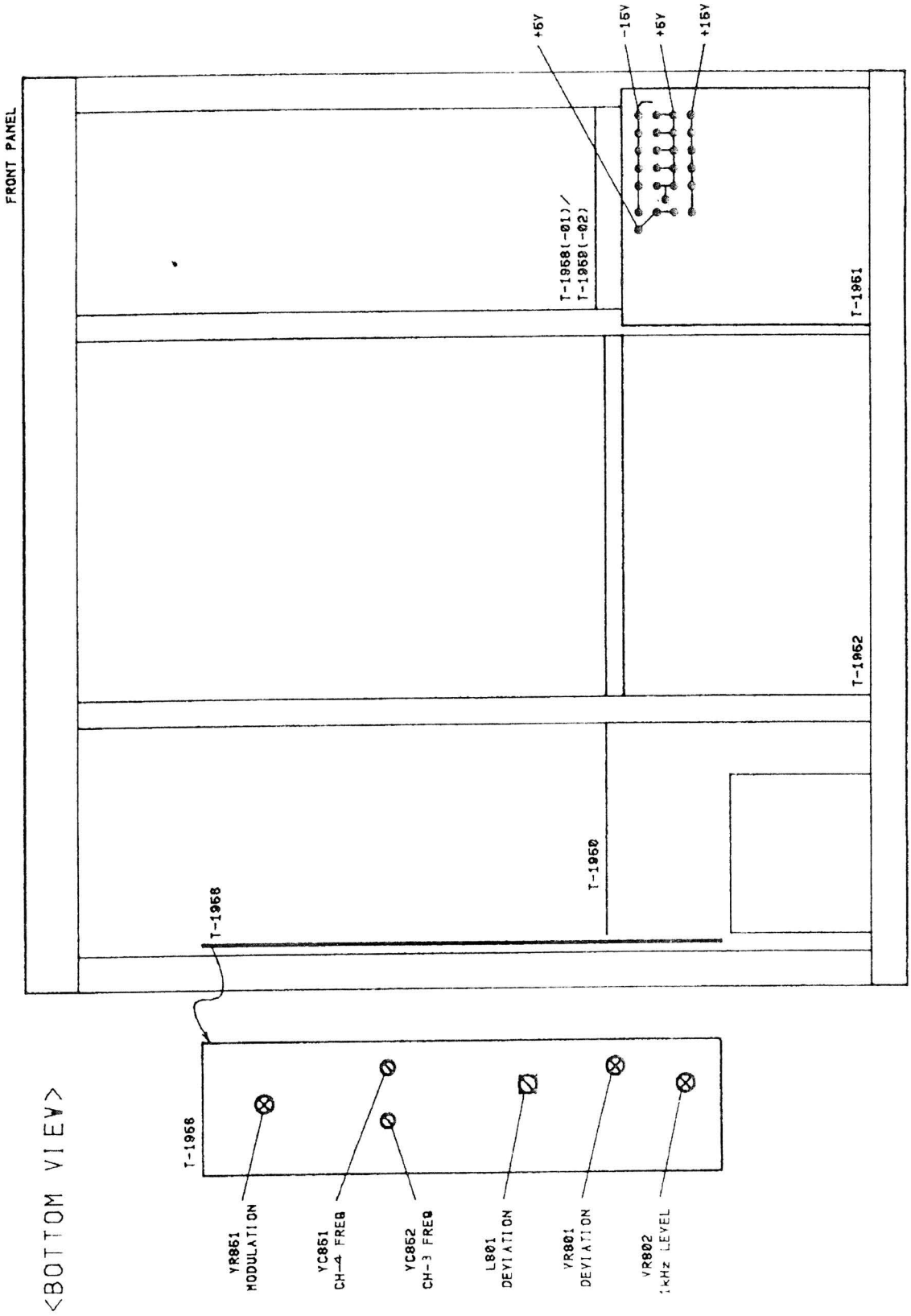
FRONT PANEL
+5V
-15V
+5V
+15V
T-1958(-01)/
T-1958(-02)
T-1961
T-1962
T-1960
T-1958
T-1958
YR851
MODULATION
YC851
CH-4 FREQ
YC852
CH-3 FREQ
L801
DEVIATION
VR801
DEVIATION
VR802
1kHz LEVEL
<BOTTOM VIEW>

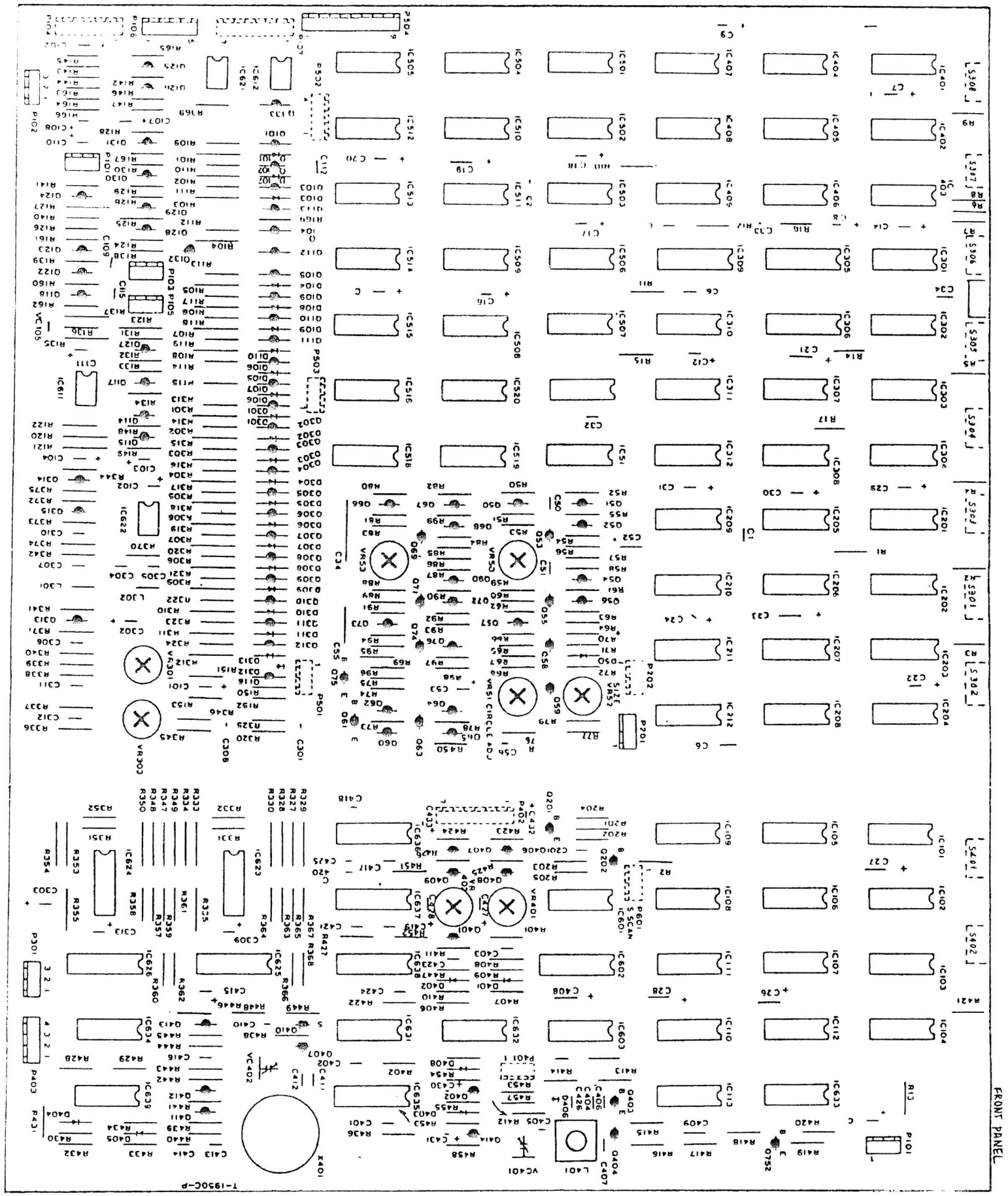
FRONT PANEL
T-1950C-P

T-1951 Power Supply Board

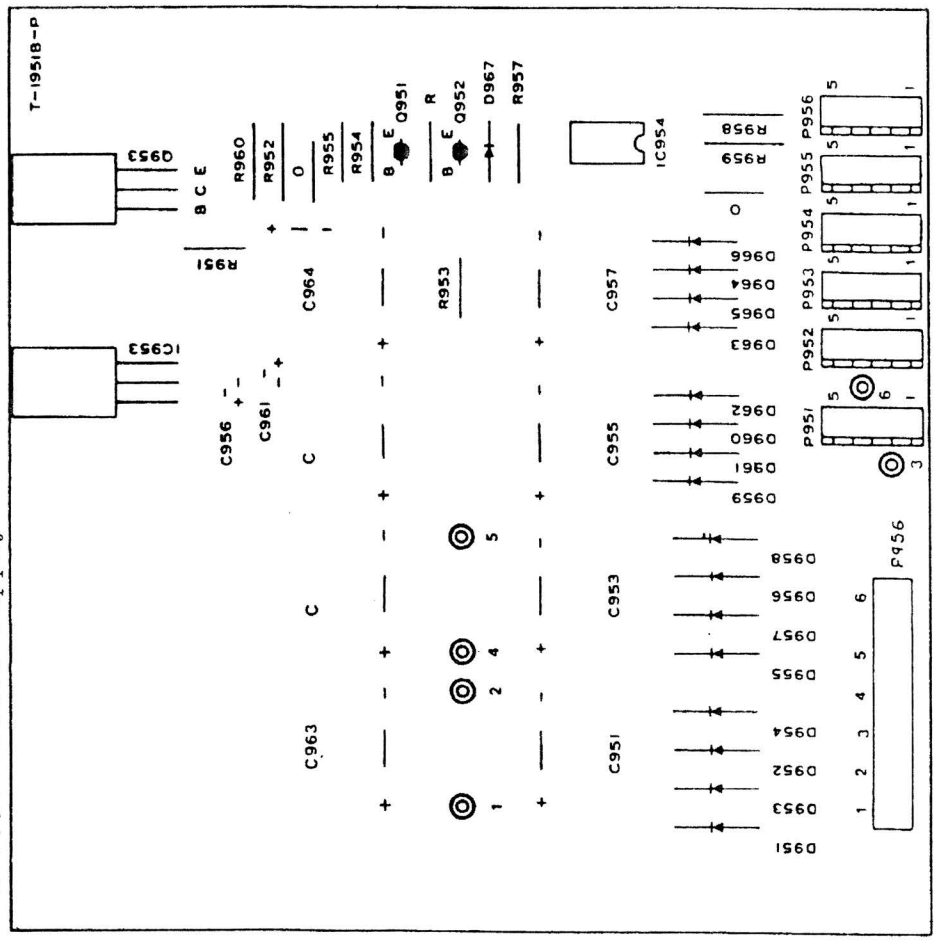

T-1952 Composite Sync Board

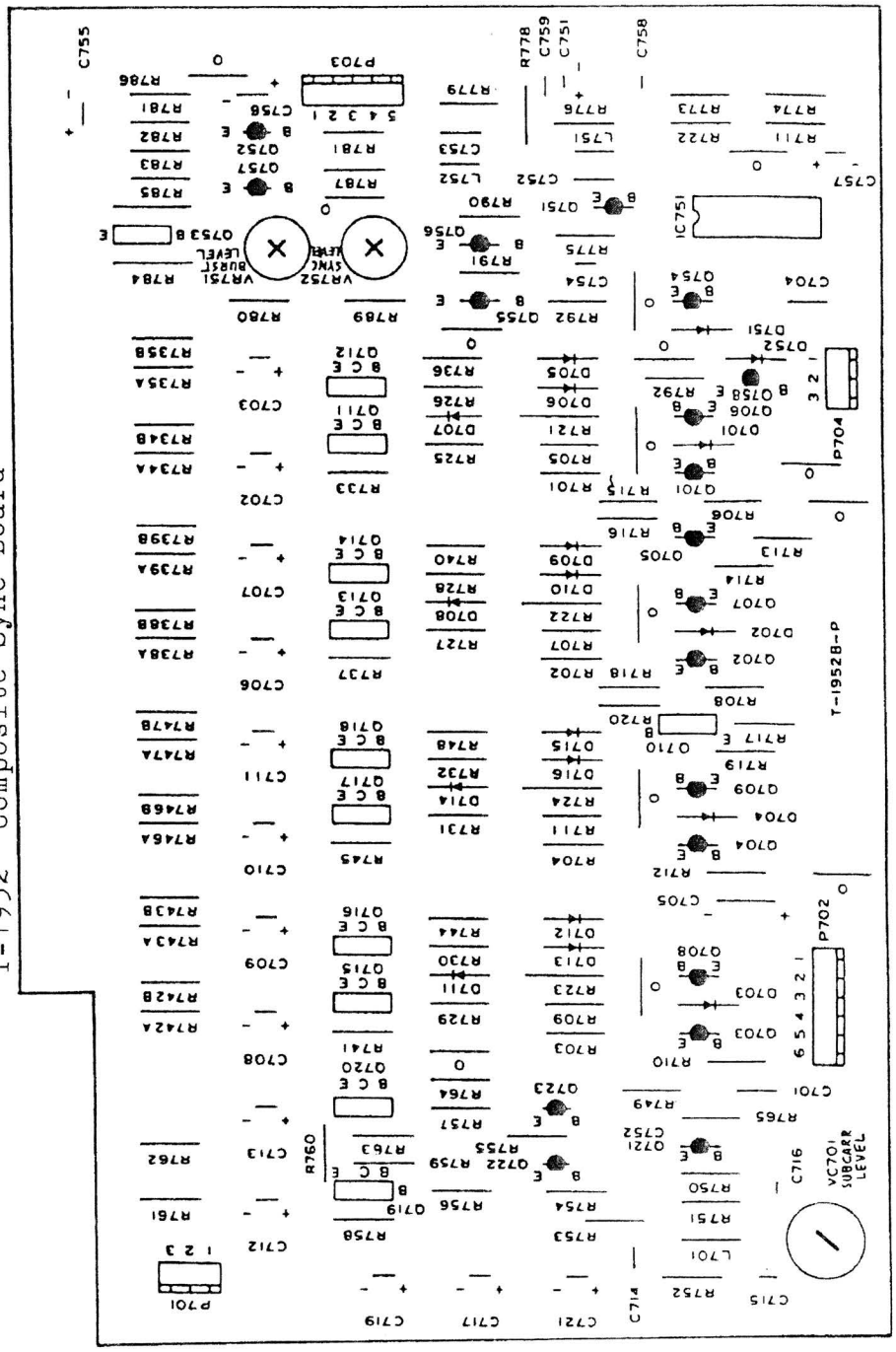

T-1953 Control Board

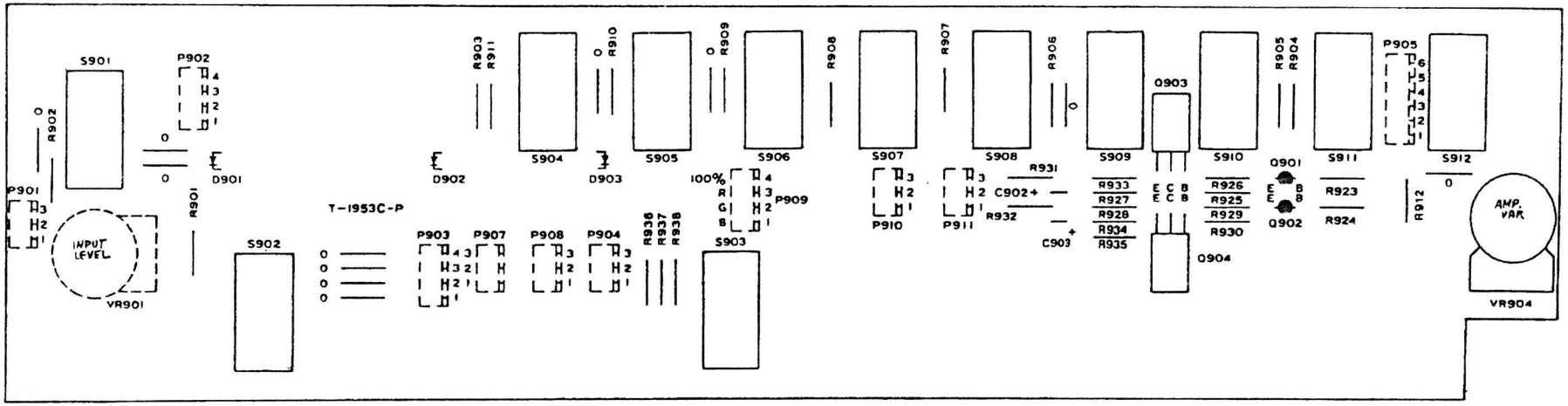

T-1954 Preset Board

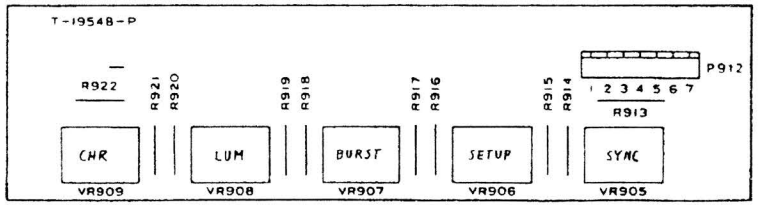

T-1955 Control Board

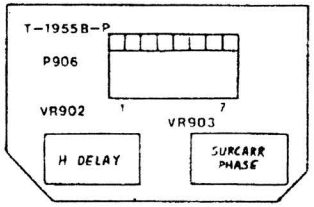

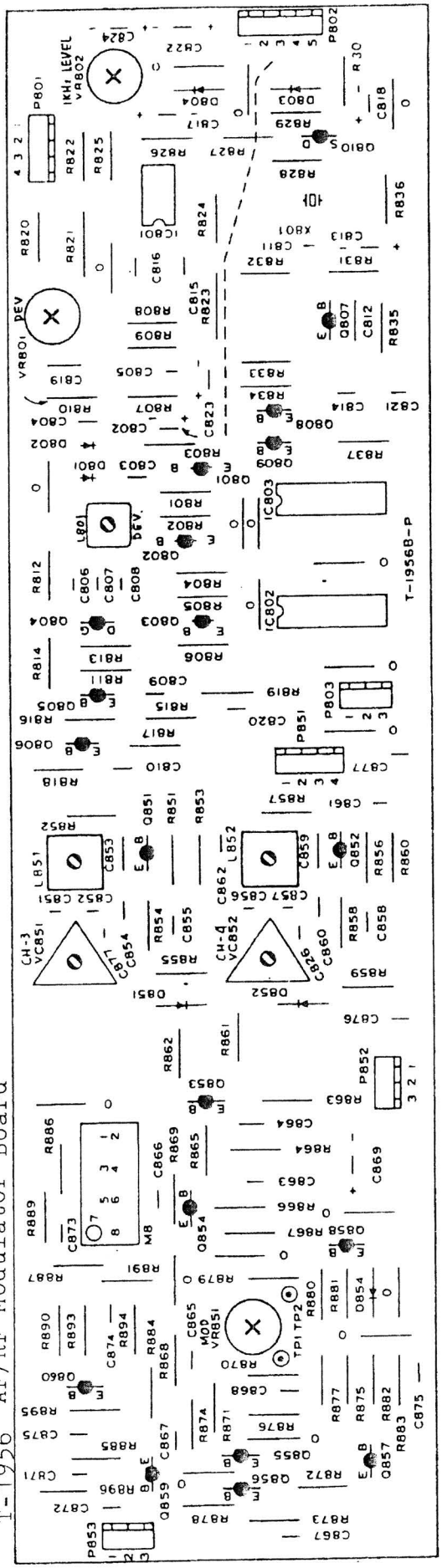

T-1956 AF/RF Modulator Board

T-1957 Gen Lock Board

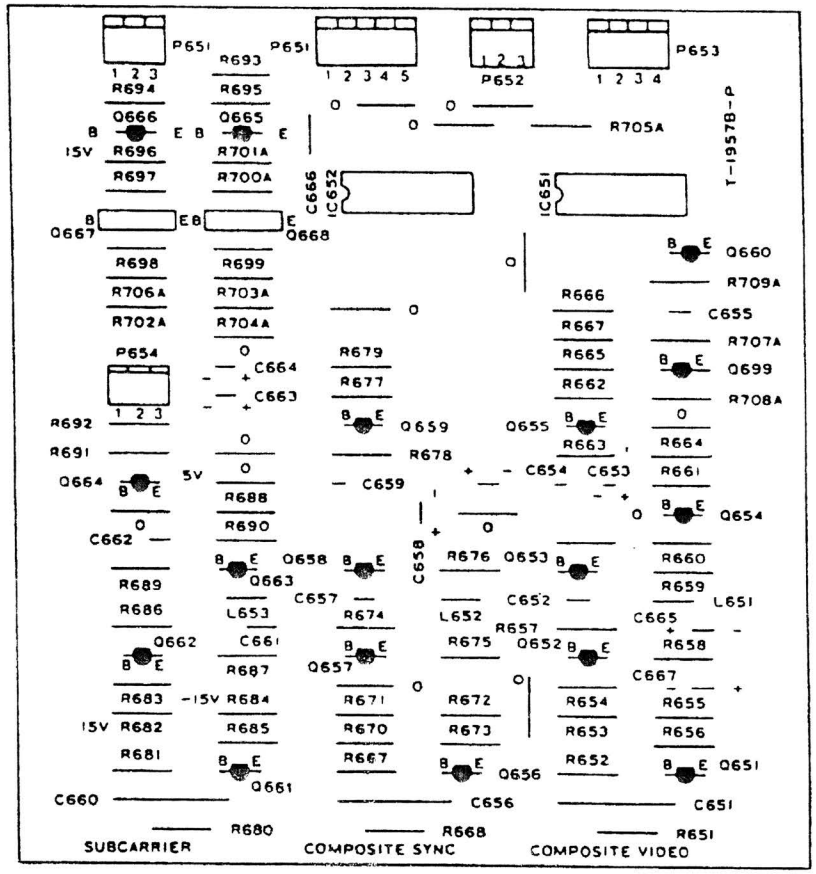

T-1958 Swemar Board

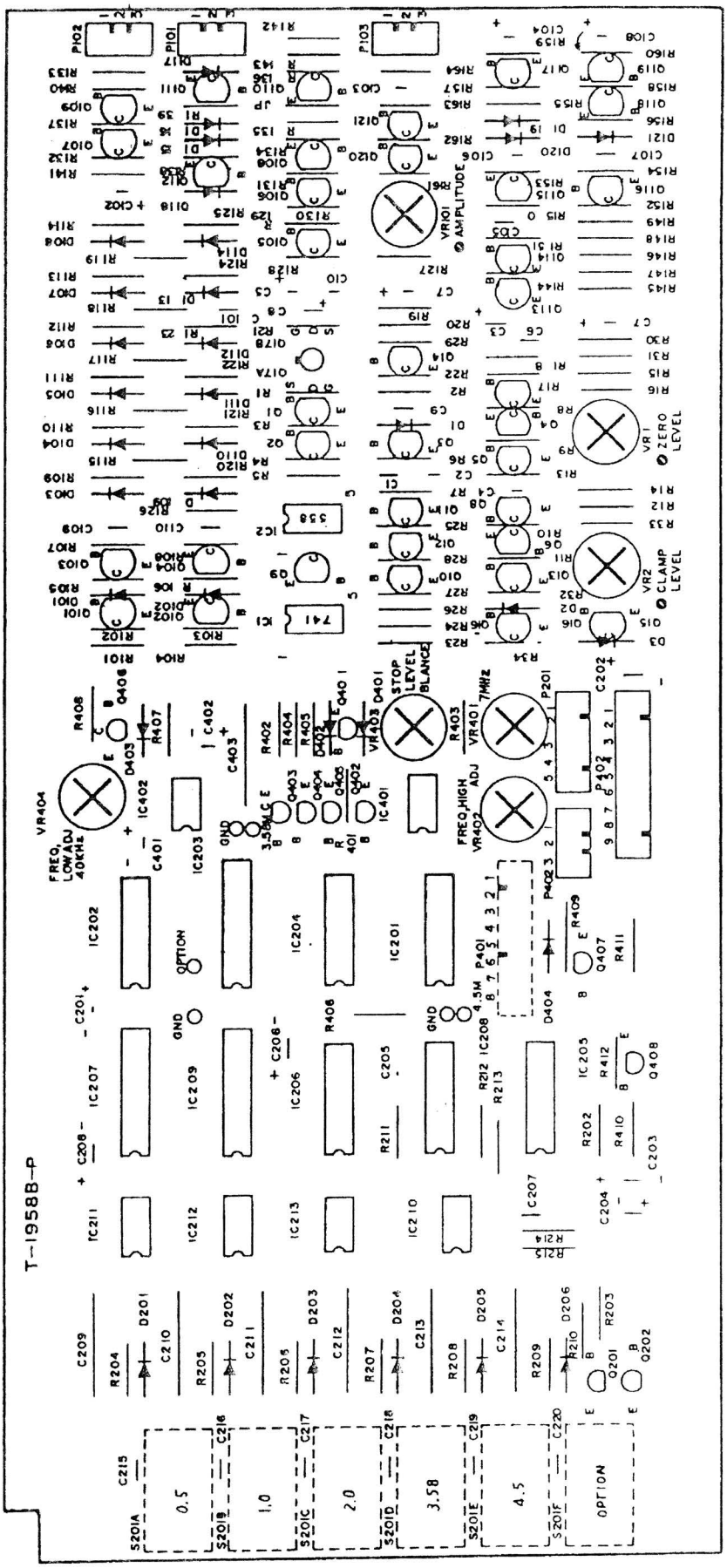

T-1959 Multiburst Board

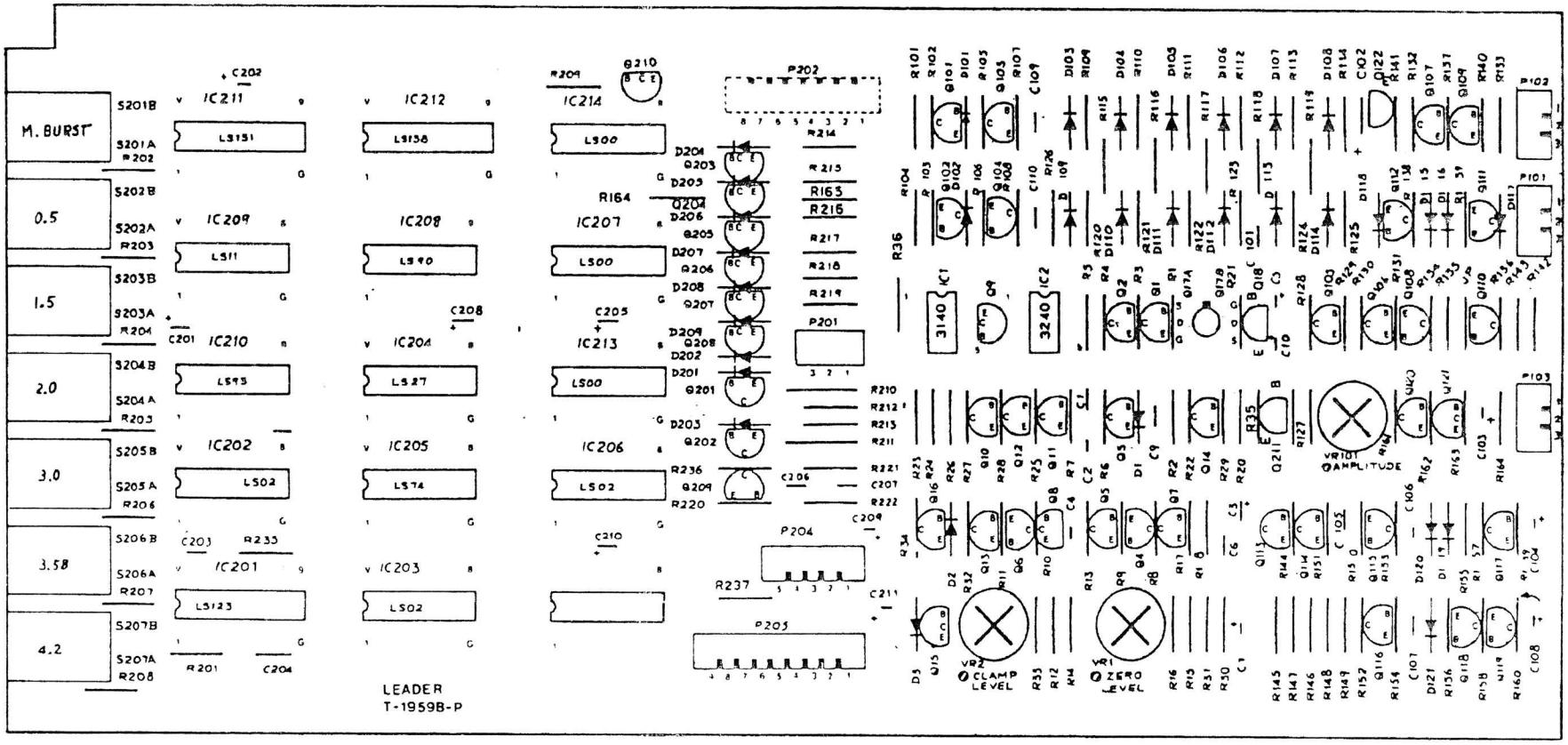

T-2002 Burst Frequency Preset

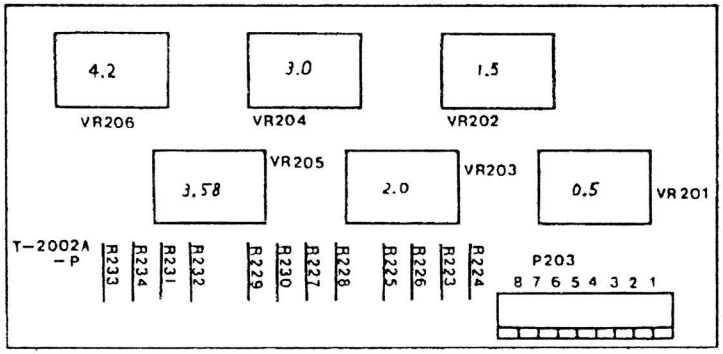

T-1960 Swemar Control Board

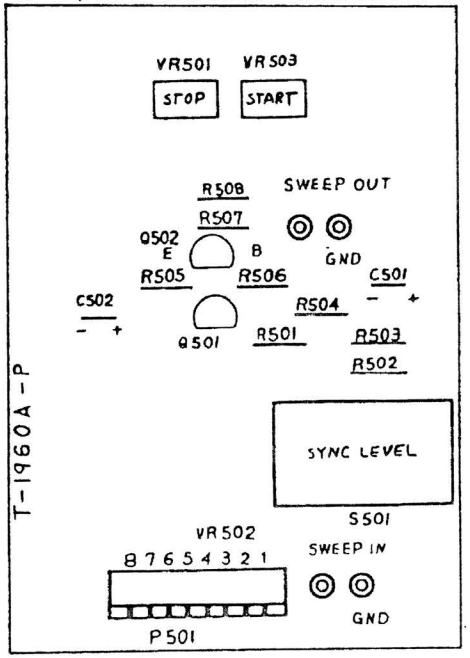

7. BLOCK DIAGRAM

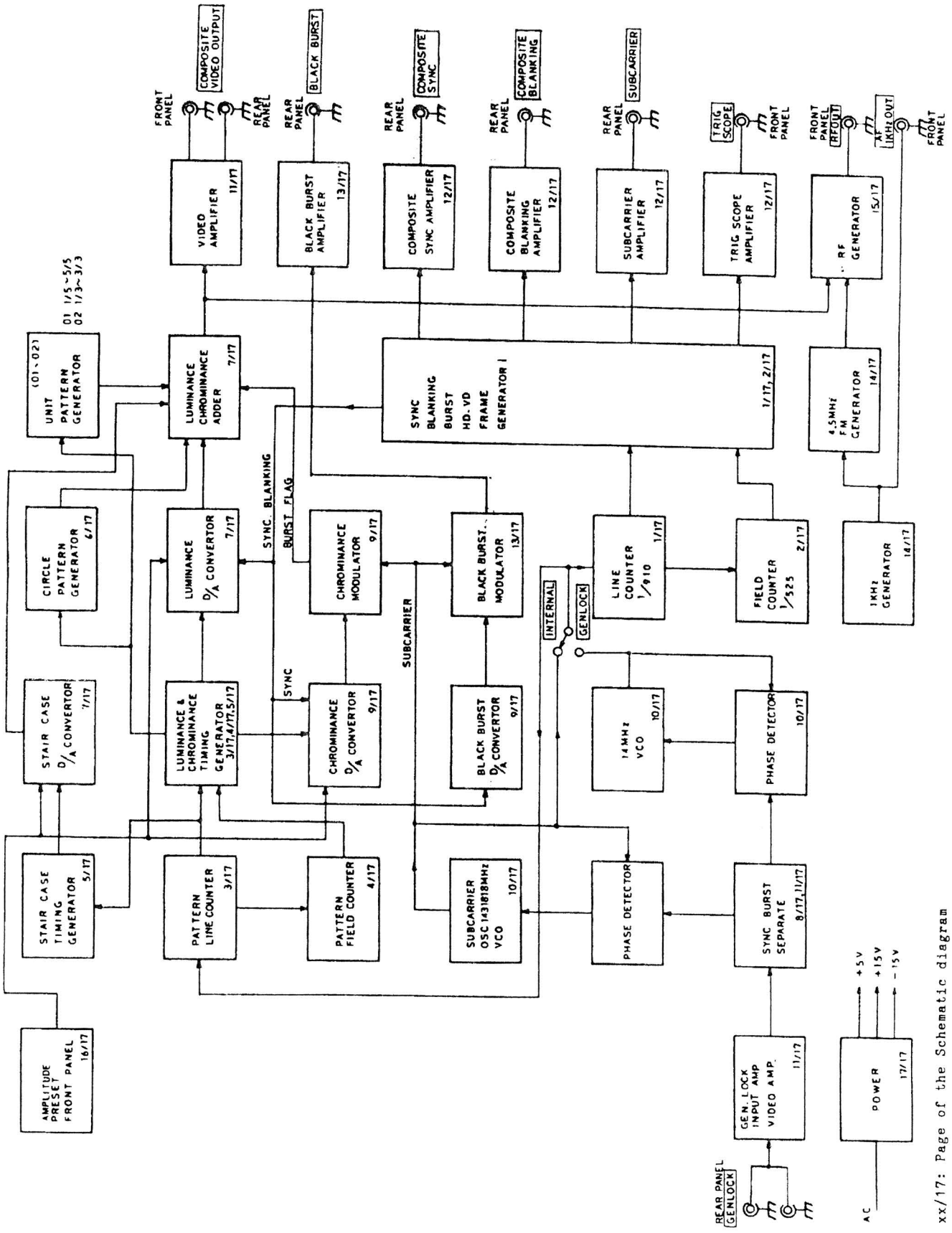

xx/17: Page of the Schematic diagram

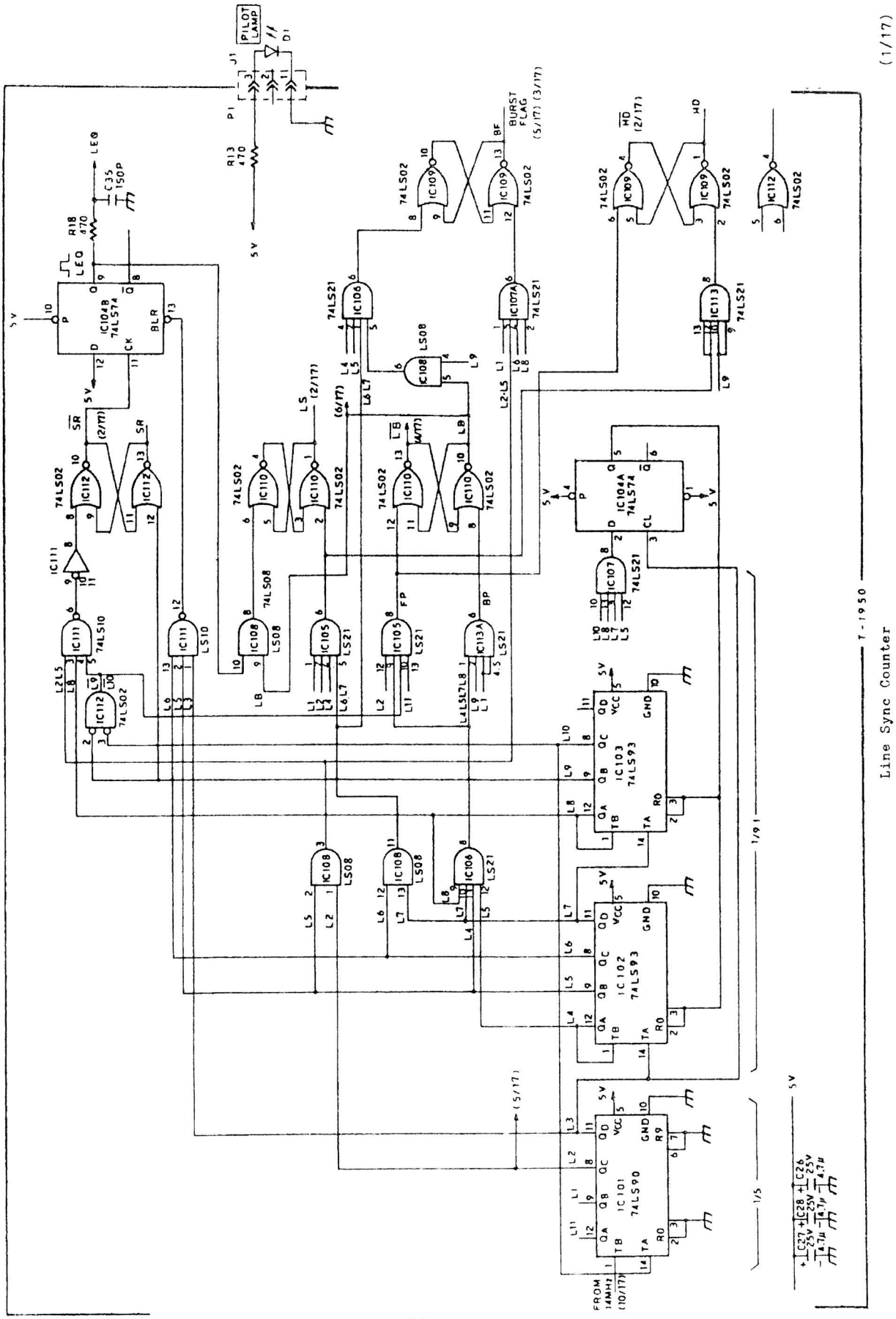
(1/17)
PILOT LAMP
J1
D1
P1
R13 470
5V
LEQ
C35 150P
R18 470
IC104B 74LS74
BLR
CK
SR
IC111
74LS10
IC112
74LS02
IC110
74LS02
IC108
LS08
IC105
LS21
IC113A
LS21
IC106
LS21
IC107A
74LS21
IC107
74LS21
IC113
74LS21
IC109
74LS02
IC112
74LS02
BURST FLAG
(5/17) (3/17)
BF
HD
(2/17)
IC104A 74LS74
CL
IC103 74LS93
IC102 74LS93
IC101 74LS90
GND
VCC
R9
FROM 14MHz (10/17)
(5/17)
1/91
1/5
C27 25V 4.7μ
C28 25V 4.7μ
C26 25V 4.7μ
T-1950
Line Sync Counter

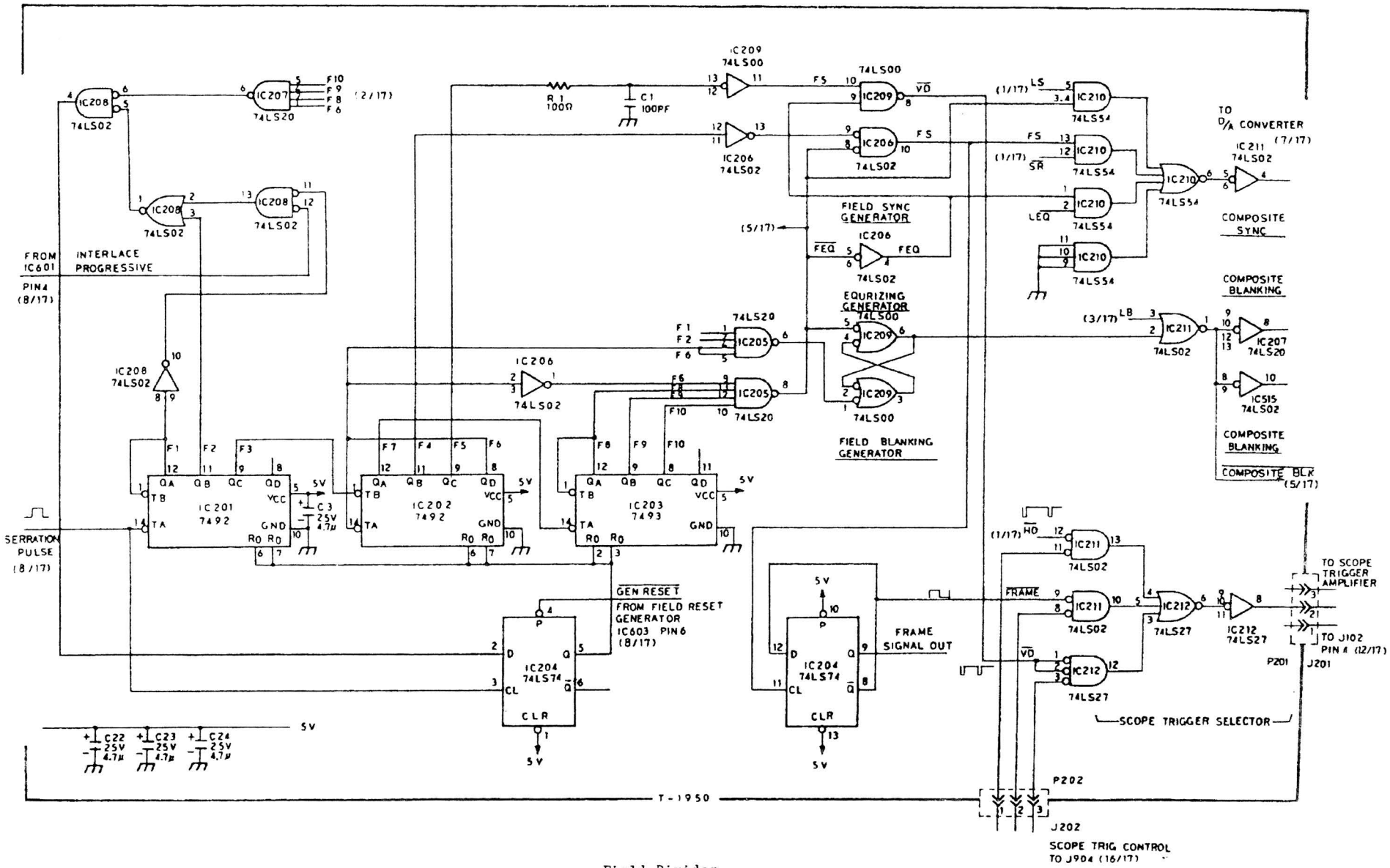

Field Divider
Field Sync Generator

(2/17)

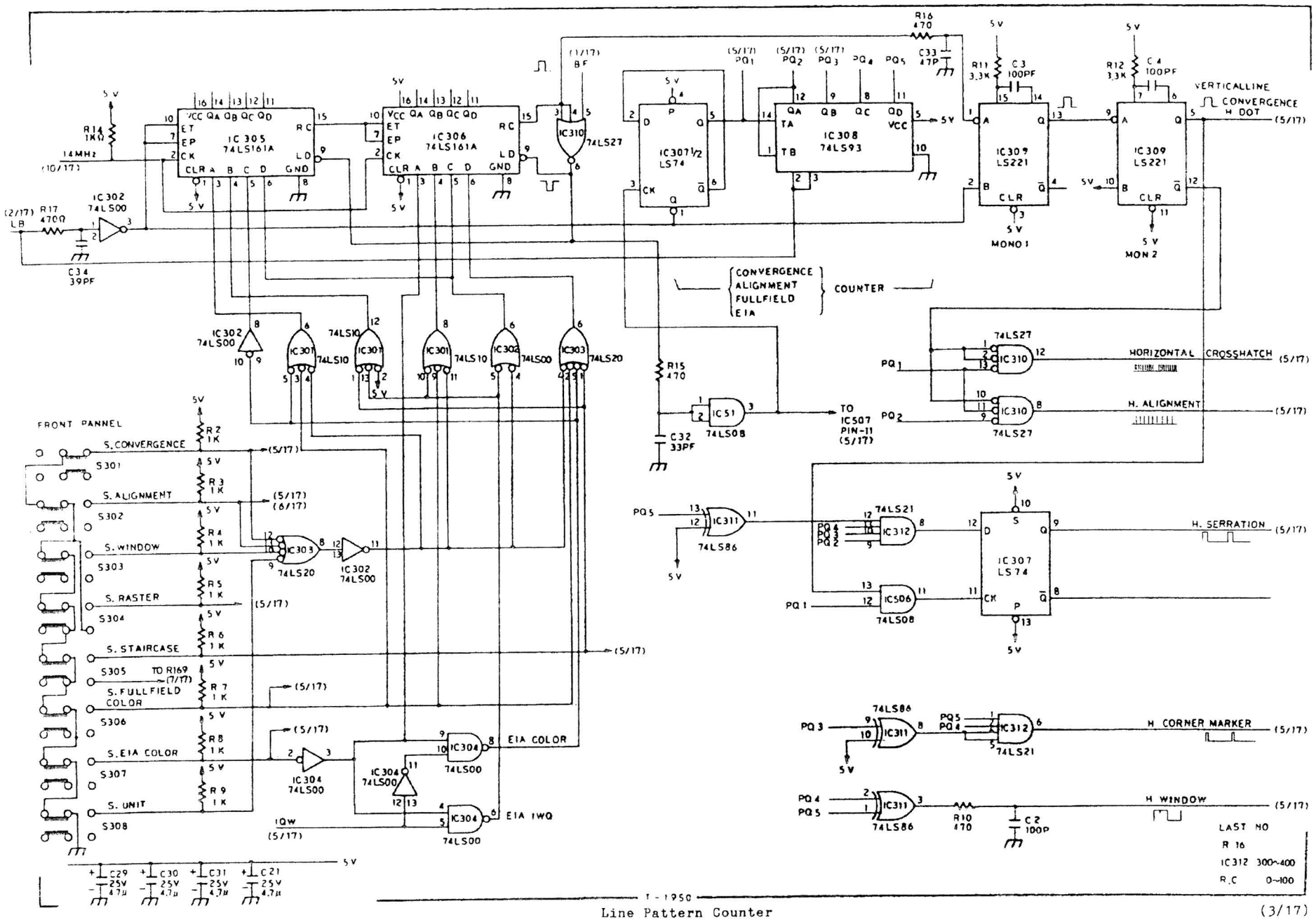

Line Pattern Counter

(3/17)

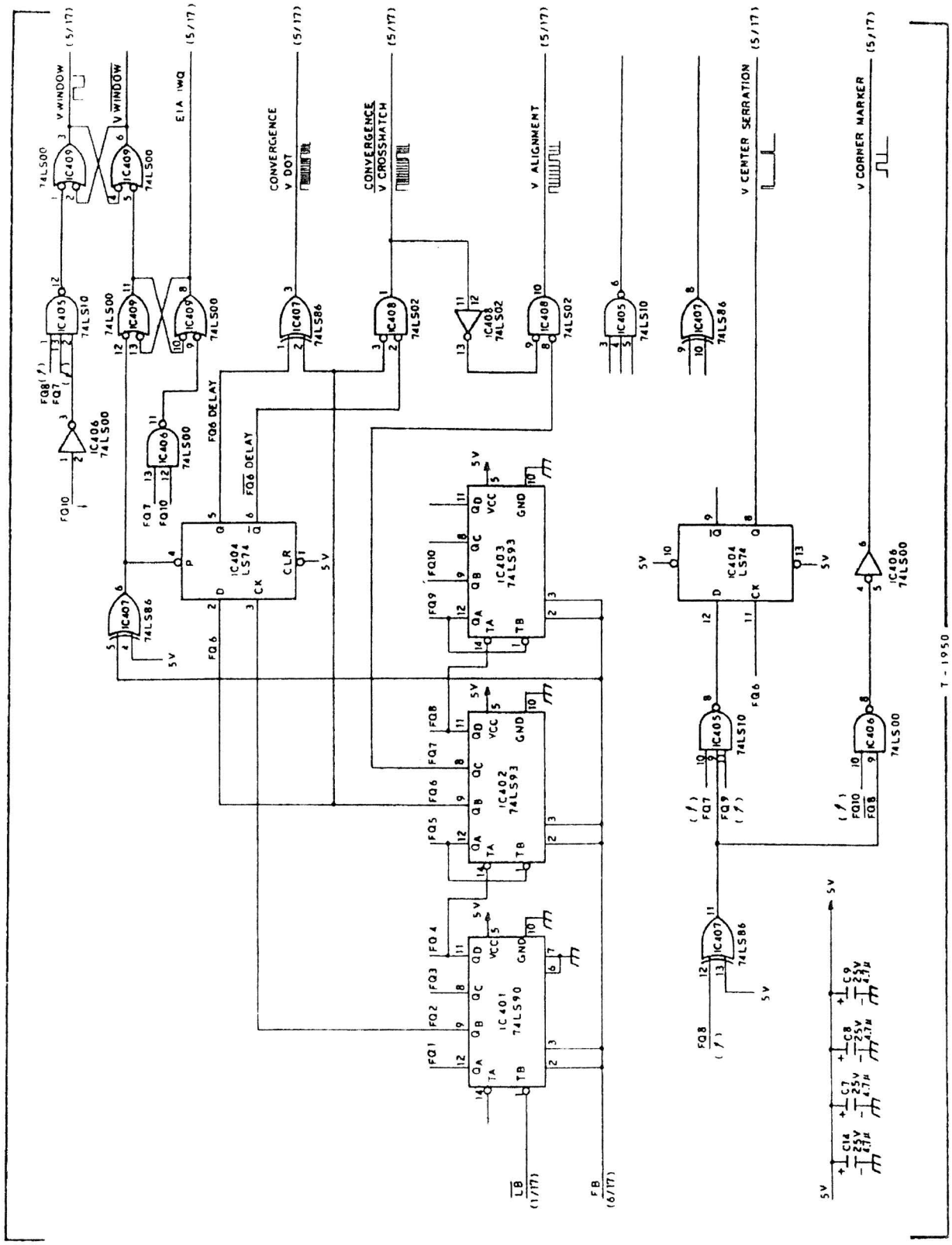
V WINDOW
V WINDOW
EIA IWQ
CONVERGENCE V DOT
CONVERGENCE V CROSSHATCH
V ALIGNMENT
V CENTER SERRATION
V CORNER MARKER
FQ6 DELAY
FQ6 DELAY
IC404 LS74
IC403 74LS93
IC402 74LS93
IC401 74LS90
IC406 74LS00
IC405 74LS10
IC407 74LS86
IC408 74LS02
IC409 74LS00
LB (1/17)
FB (6/17)
(5/17)
(4/17)
T - 1950
Field Pattern Counter

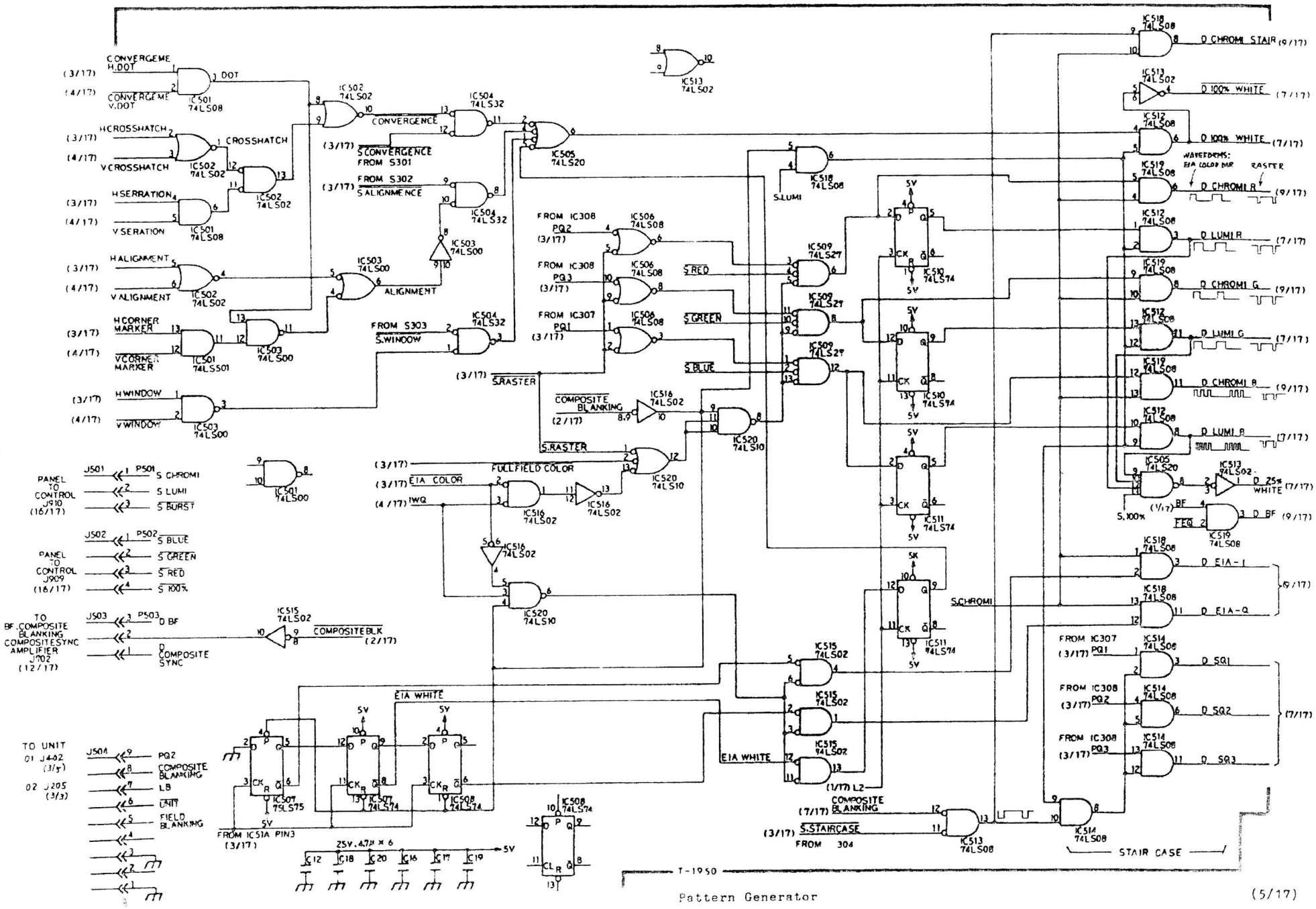

Pattern Generator (5/17)

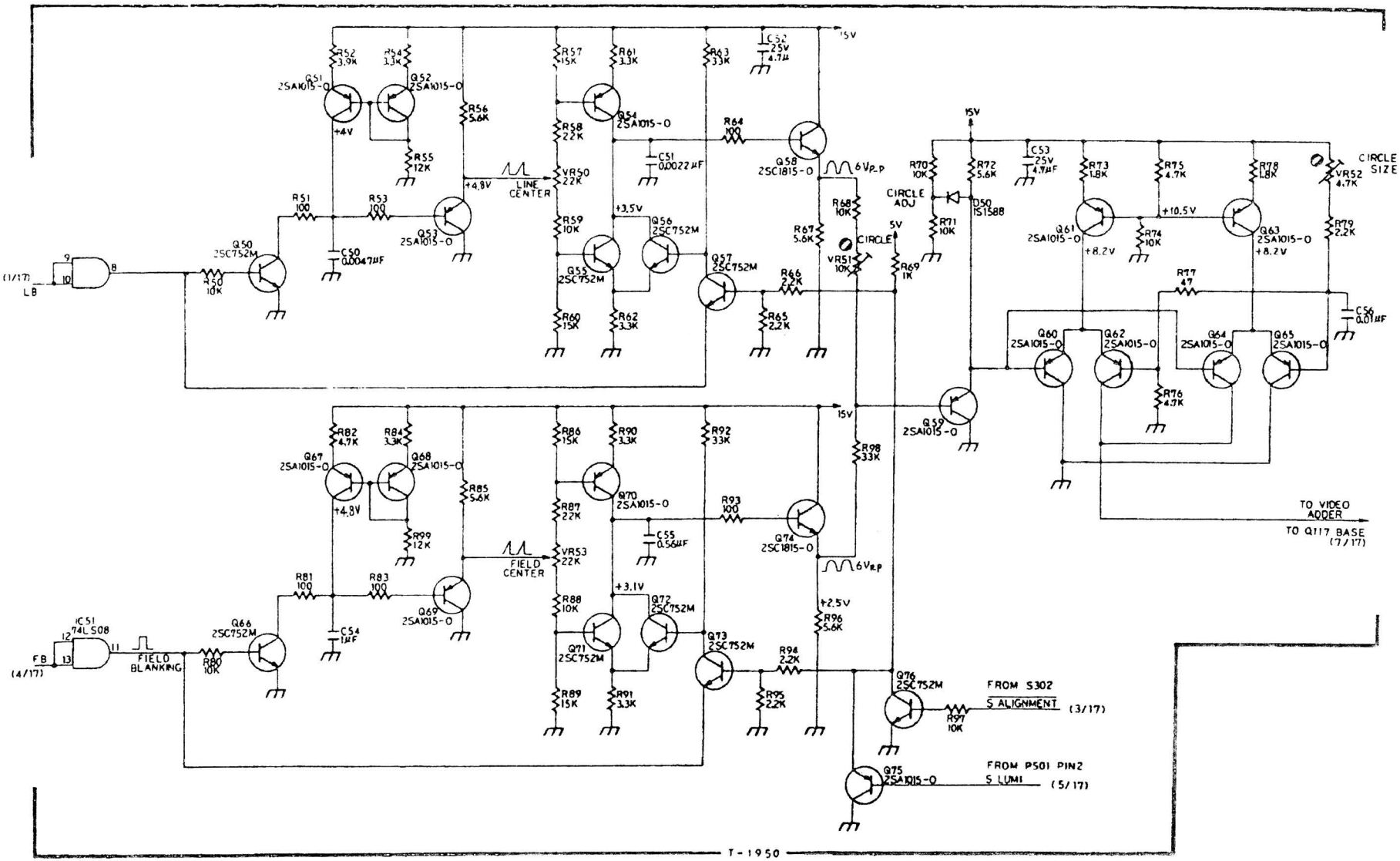

Circle Pattern

(6/17)

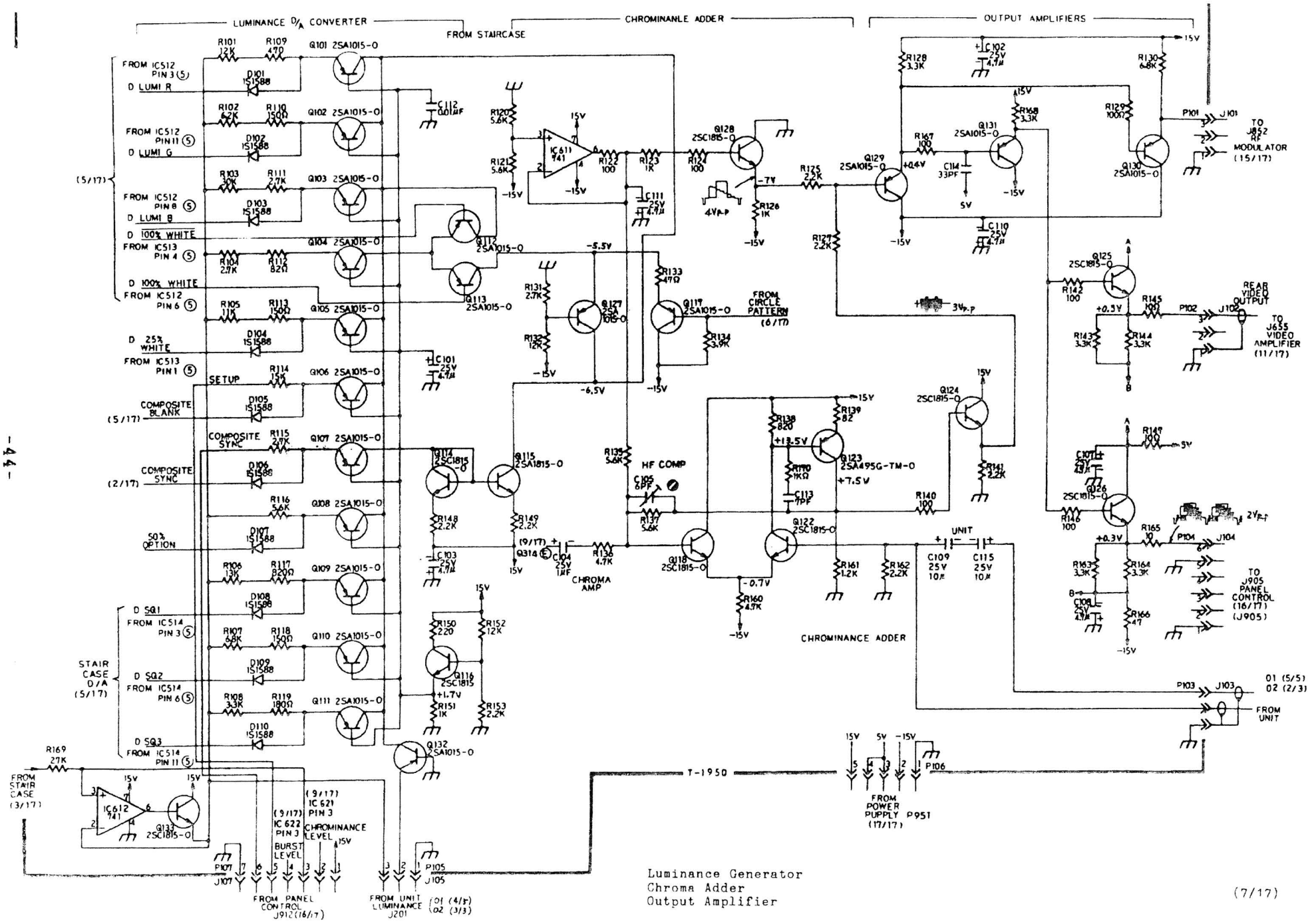

Luminance Generator
Chroma Adder
Output Amplifier

(7/17)

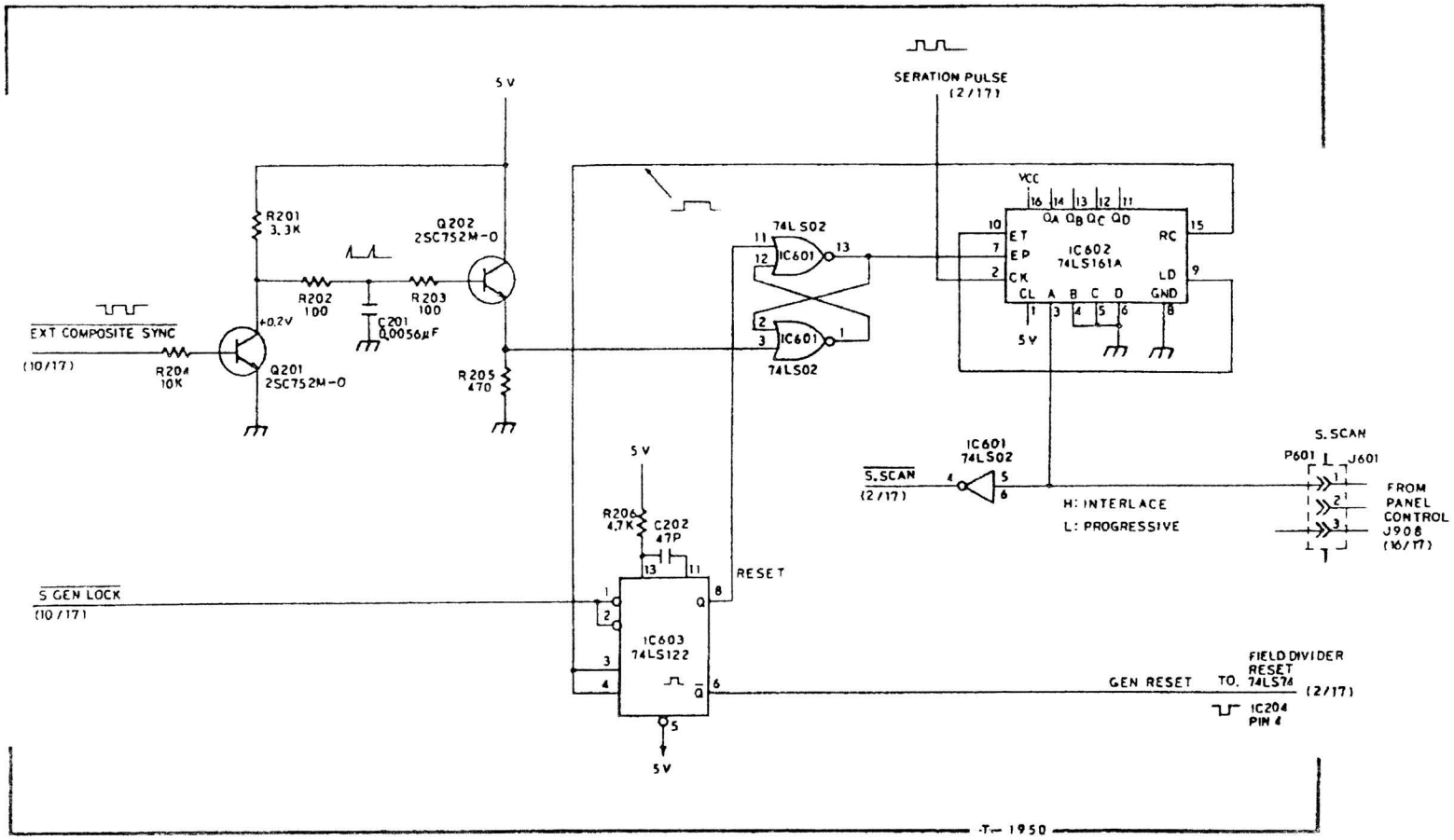

Field Reset Generator

(8/17)

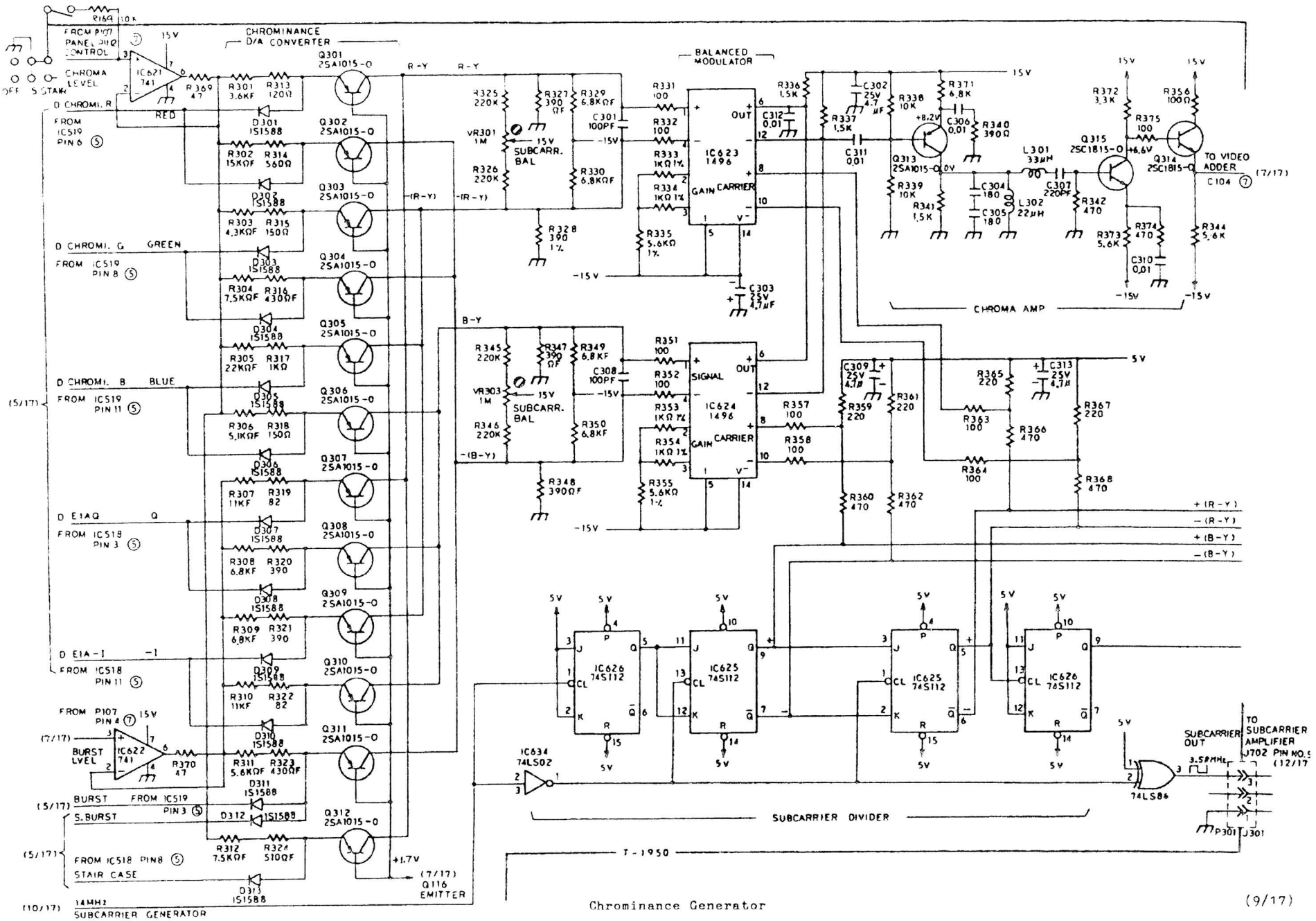

Chrominance Generator

(9/17)

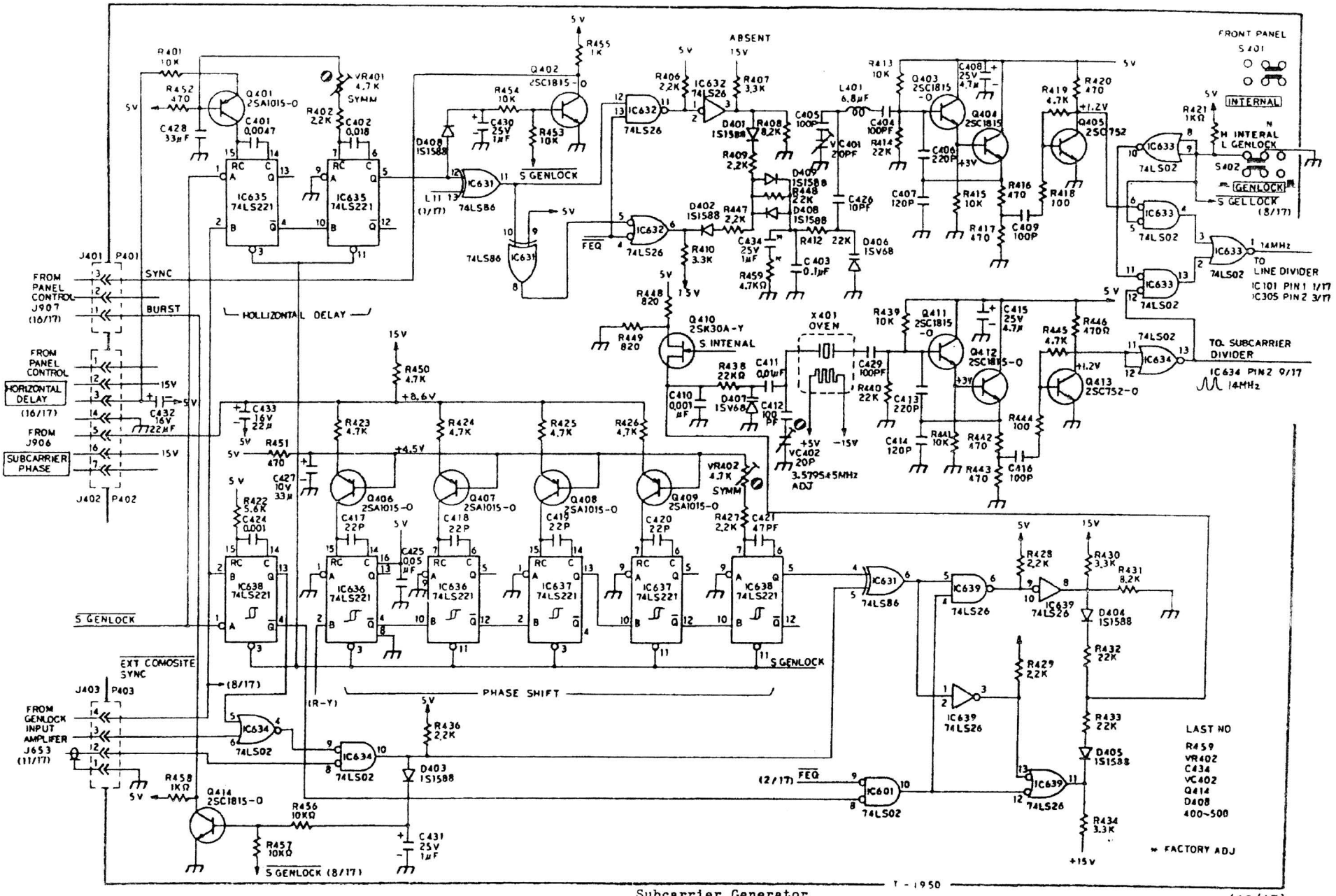

Subcarrier Generator
Subcarrier Phase

(10/17)

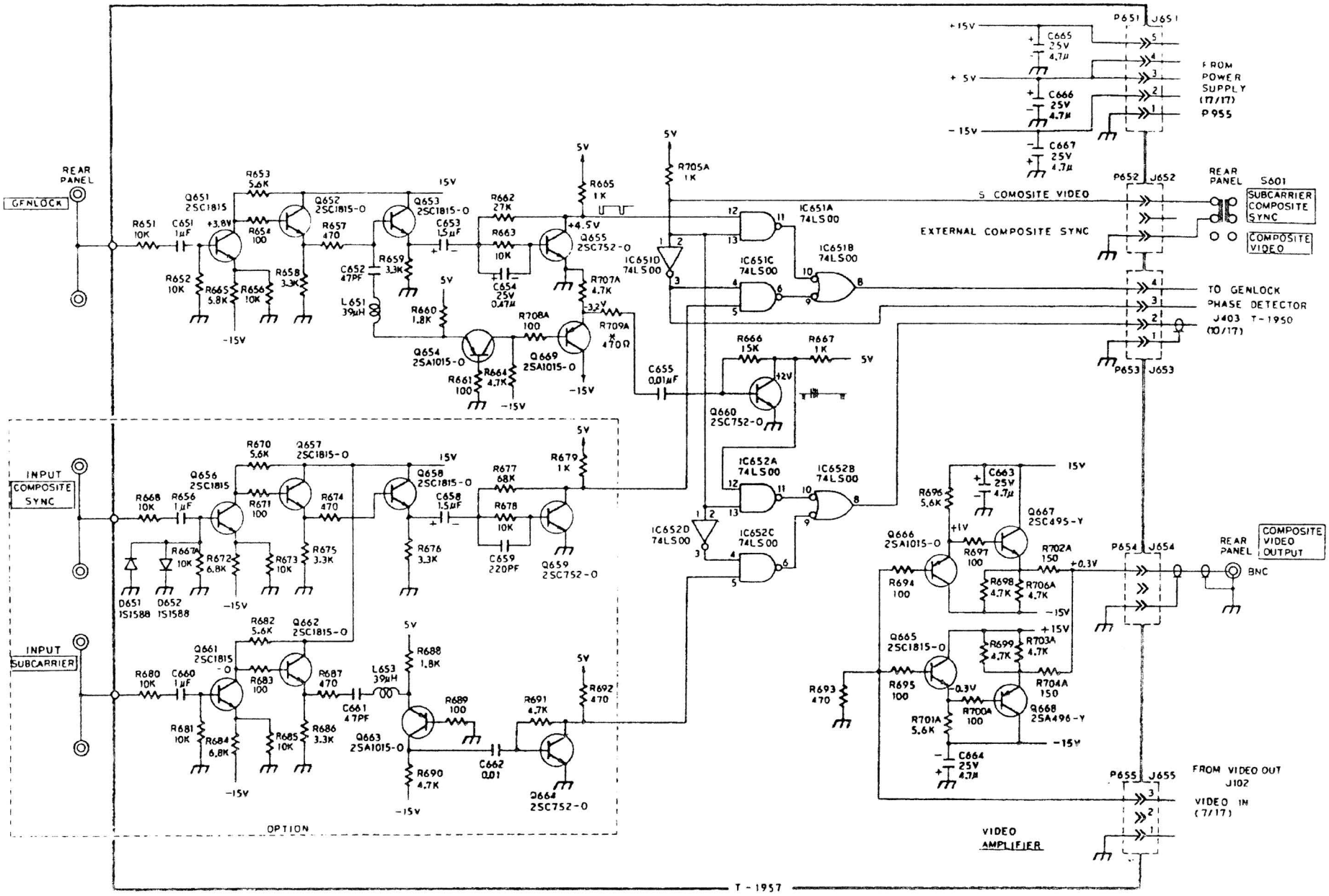

Gen Lock Input Amplifier (11/17)

* FACTRY ADJ.

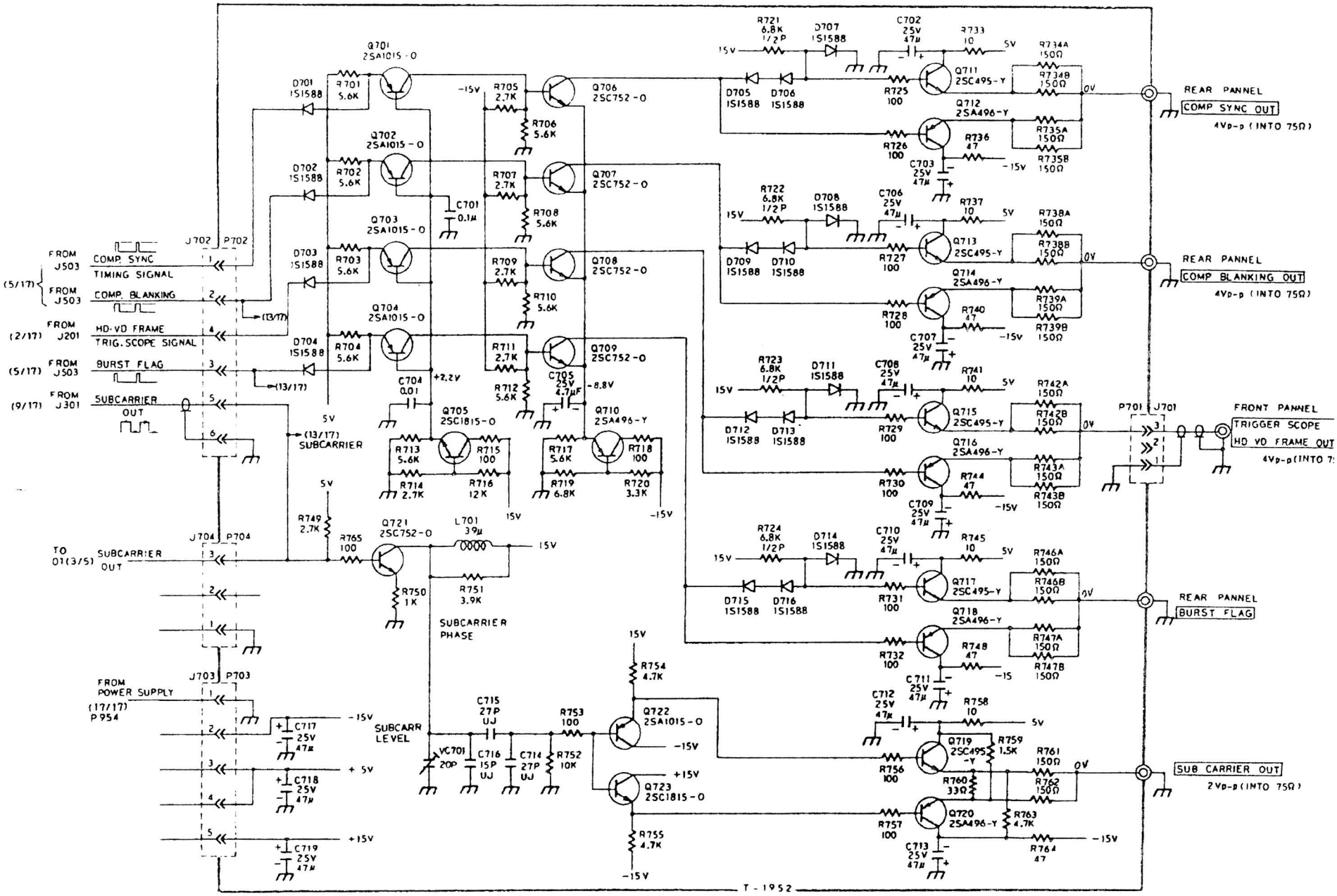

Composite Sync, Trig Scope
Composite Blanking
Subcarrier Amplifier

(12/17)

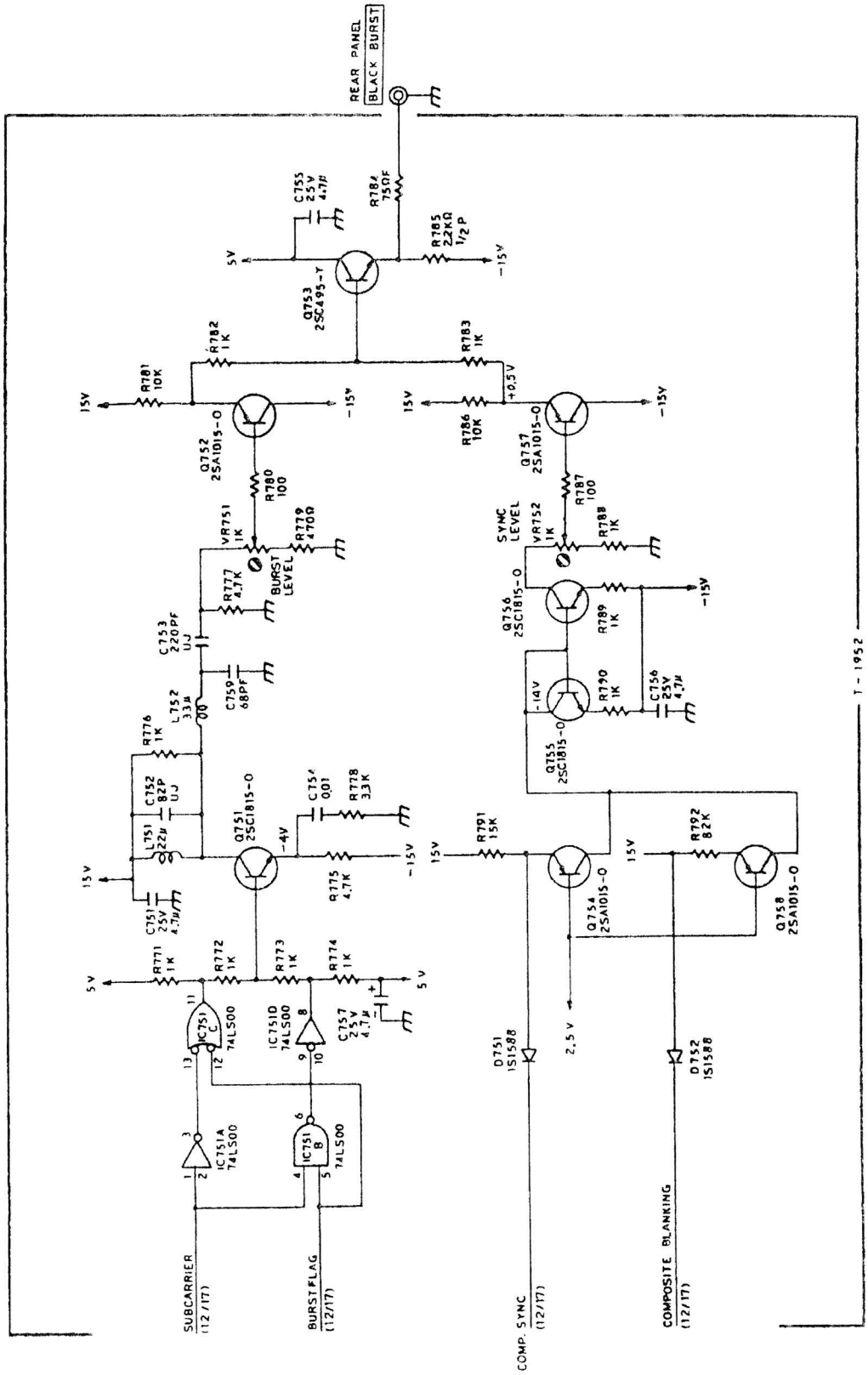
REAR PANEL
BLACK BURST
C755 25V 4.7μ
R784 750F
R785 2.2KΩ 1/2 P
Q753 2SC495-Y
R782 1K
R783 1K
R781 10K
Q752 2SA1015-O
R780 100
VR751 1K
R779 470Ω
BURST LEVEL
R777 4.7K
C753 220PF UJ
C759 68PF
L752 33μ
R776 1K
C752 82P UJ
L751 22μ
C751 25V 4.7μ
Q751 2SC1815-O
C754 0.01
R778 3.3K
R775 4.7K
R771 1K
R772 1K
R773 1K
R774 1K
IC751C 74LS00
IC751D 74LS00
C757 25V 4.7μ
IC751A 74LS00
IC751B 74LS00
SUBCARRIER (12/17)
BURST FLAG (12/17)
R786 10K
Q757 2SA1015-O
R787 100
SYNC LEVEL
VR752 1K
R788 1K
Q756 2SC1815-O
R789 1K
R790 1K
C756 25V 4.7μ
Q755 2SC1815-O
R791 15K
Q754 2SA1015-O
R792 82K
Q758 2SA1015-O
D751 1S1588
D752 1S1588
COMP. SYNC (12/17)
COMPOSITE BLANKING (12/17)
T-1952
Black Burst

(13/17)

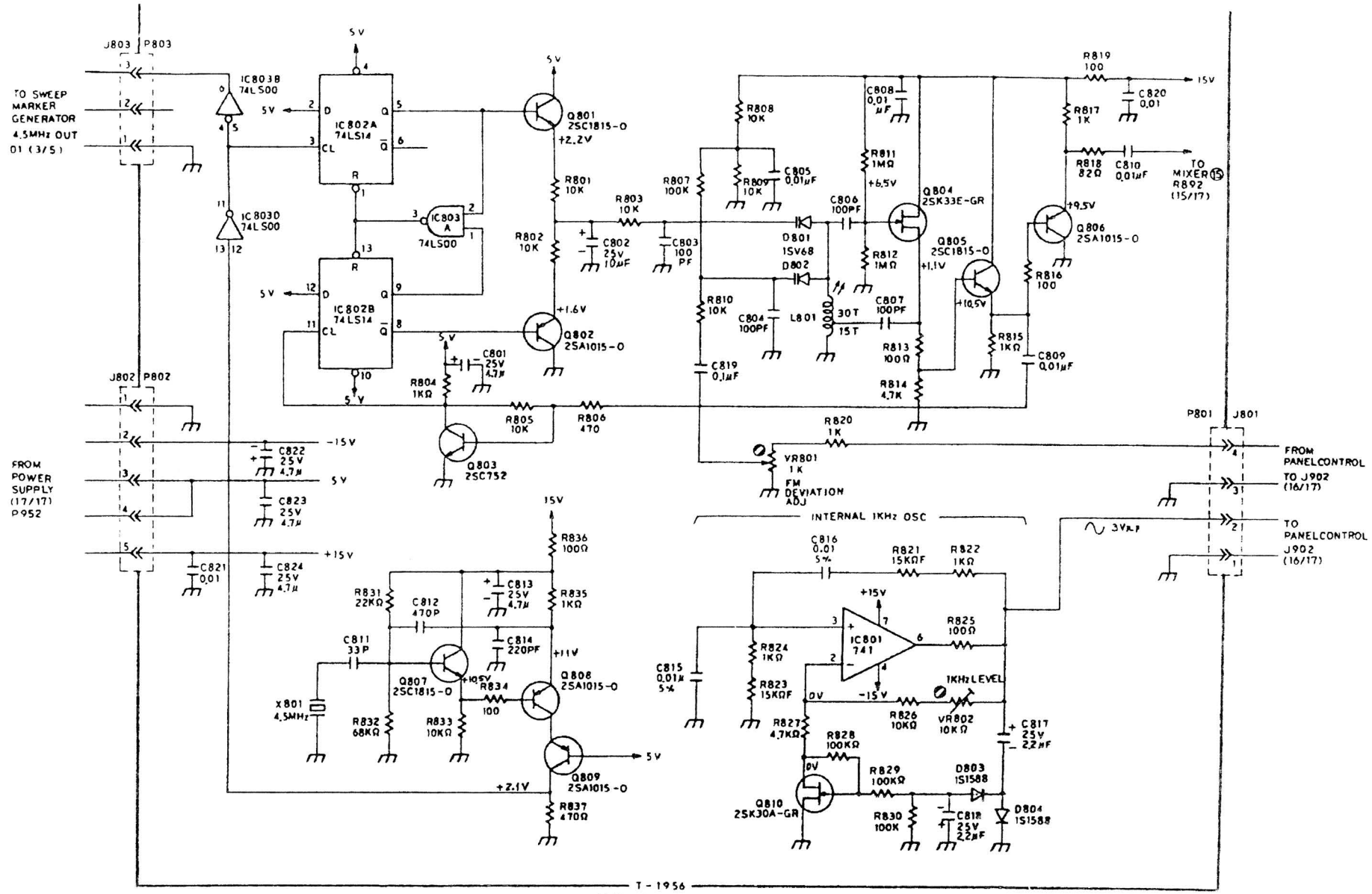

1kHz Oscillator
4.5MHz FM Demodulator

(14/17)

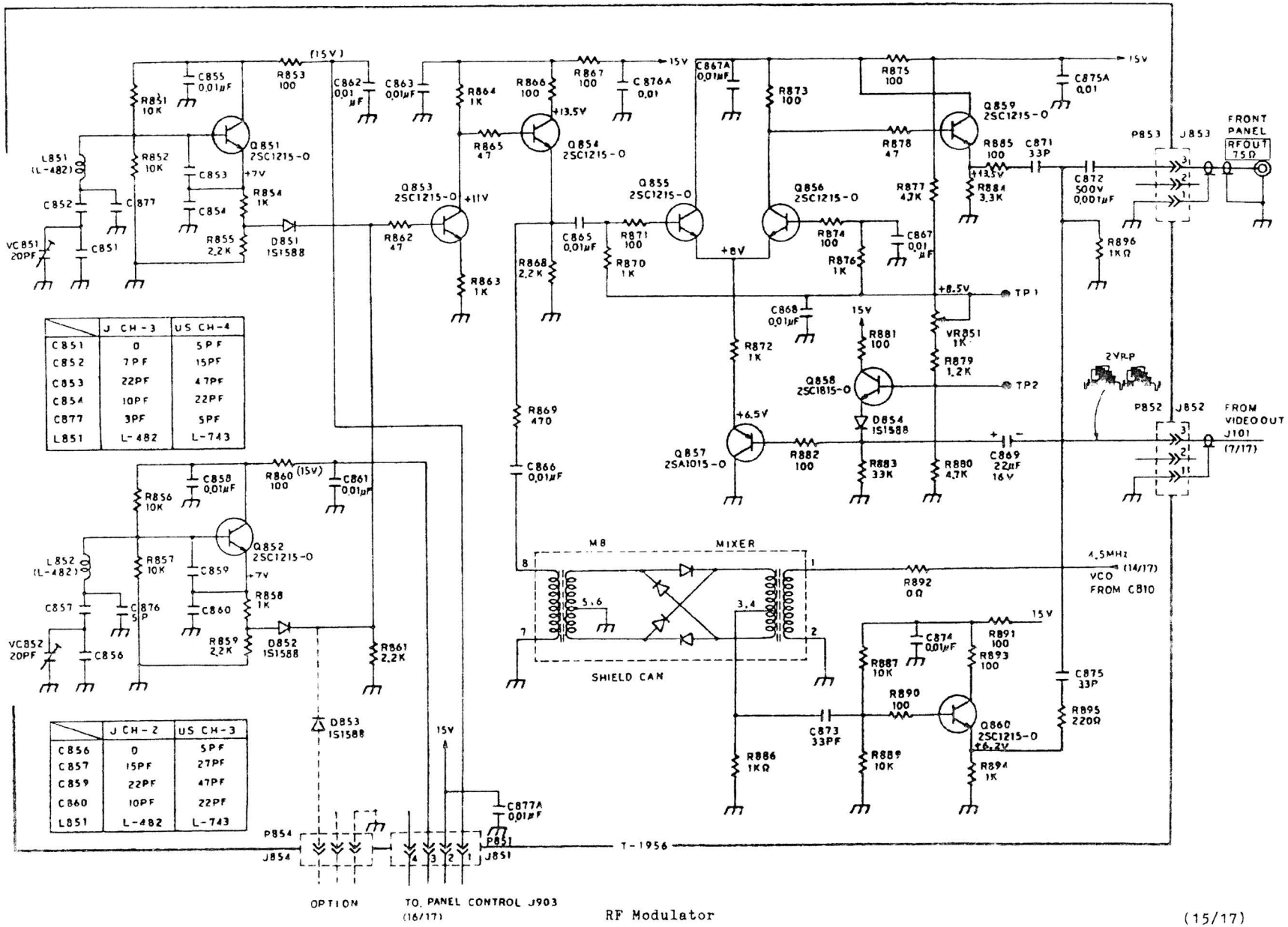

	J CH-3	US CH-4
C851	0	5PF
C852	7PF	15PF
C853	22PF	47PF
C854	10PF	22PF
C877	3PF	5PF
L851	L-482	L-743

	J CH-2	US CH-3
C856	0	5PF
C857	15PF	27PF
C859	22PF	47PF
C860	10PF	22PF
L851	L-482	L-743

RF Modulator

(15/17)

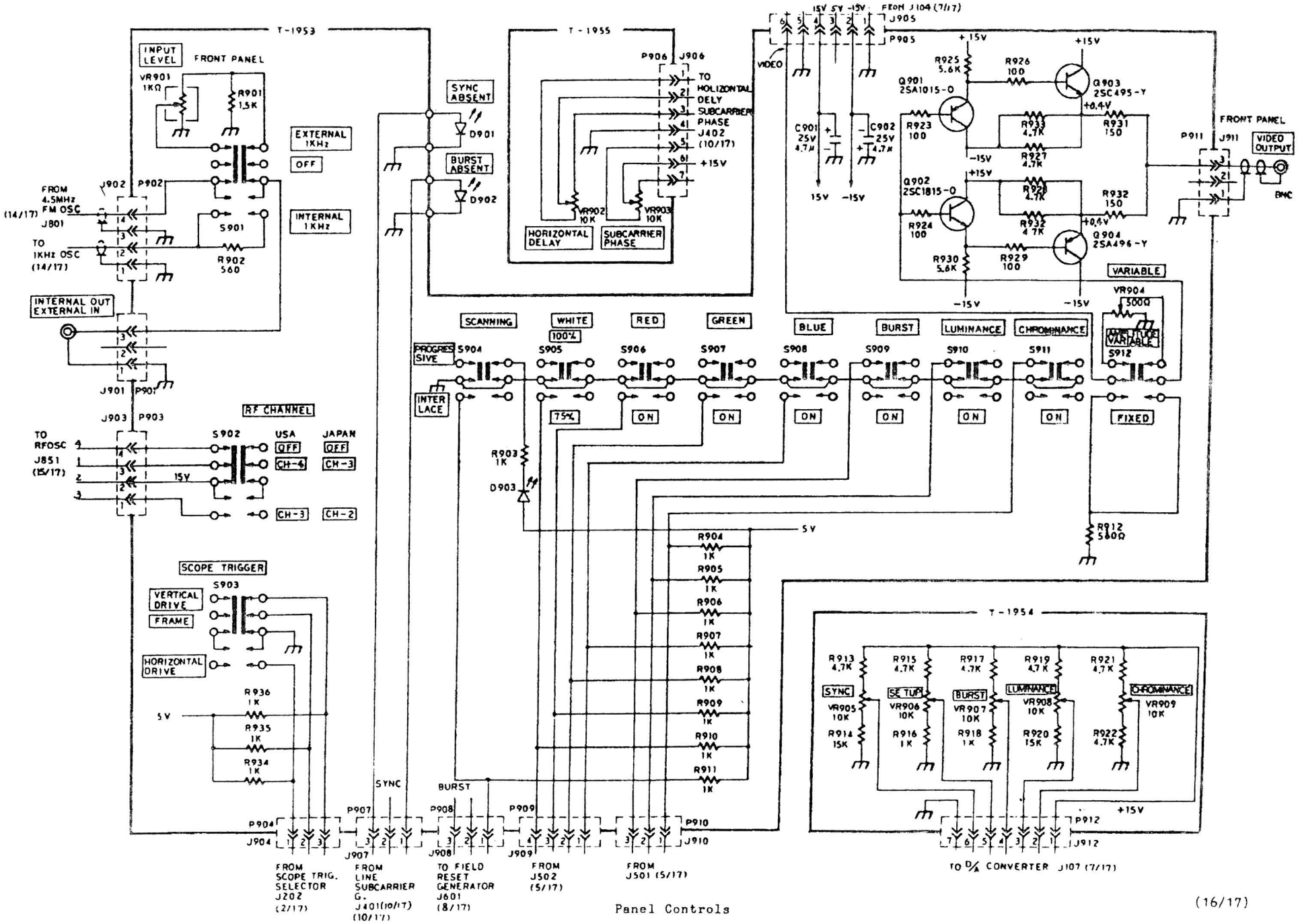

Panel Controls

(16/17)

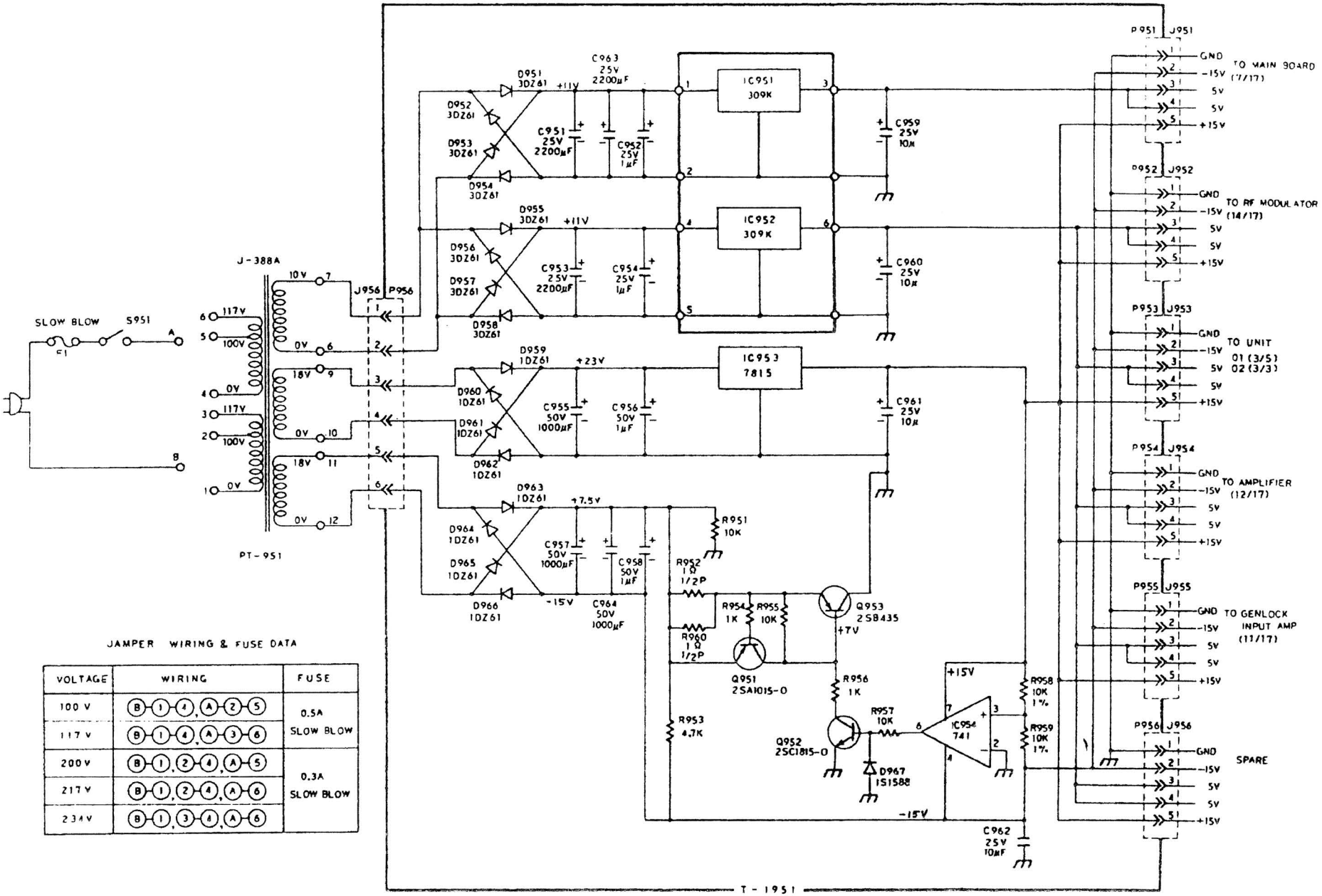

JAMPER WIRING & FUSE DATA

VOLTAGE	WIRING	FUSE
100 V	B-1-4, A-2-5	0.5A SLOW BLOW
117 V	B-1-4, A-3-6	
200 V	B-1, 2-4, A-5	0.3A SLOW BLOW
217 V	B-1, 2-4, A-6	
234 V	B-1, 3-4, A-6	

Power Supply (17/17)

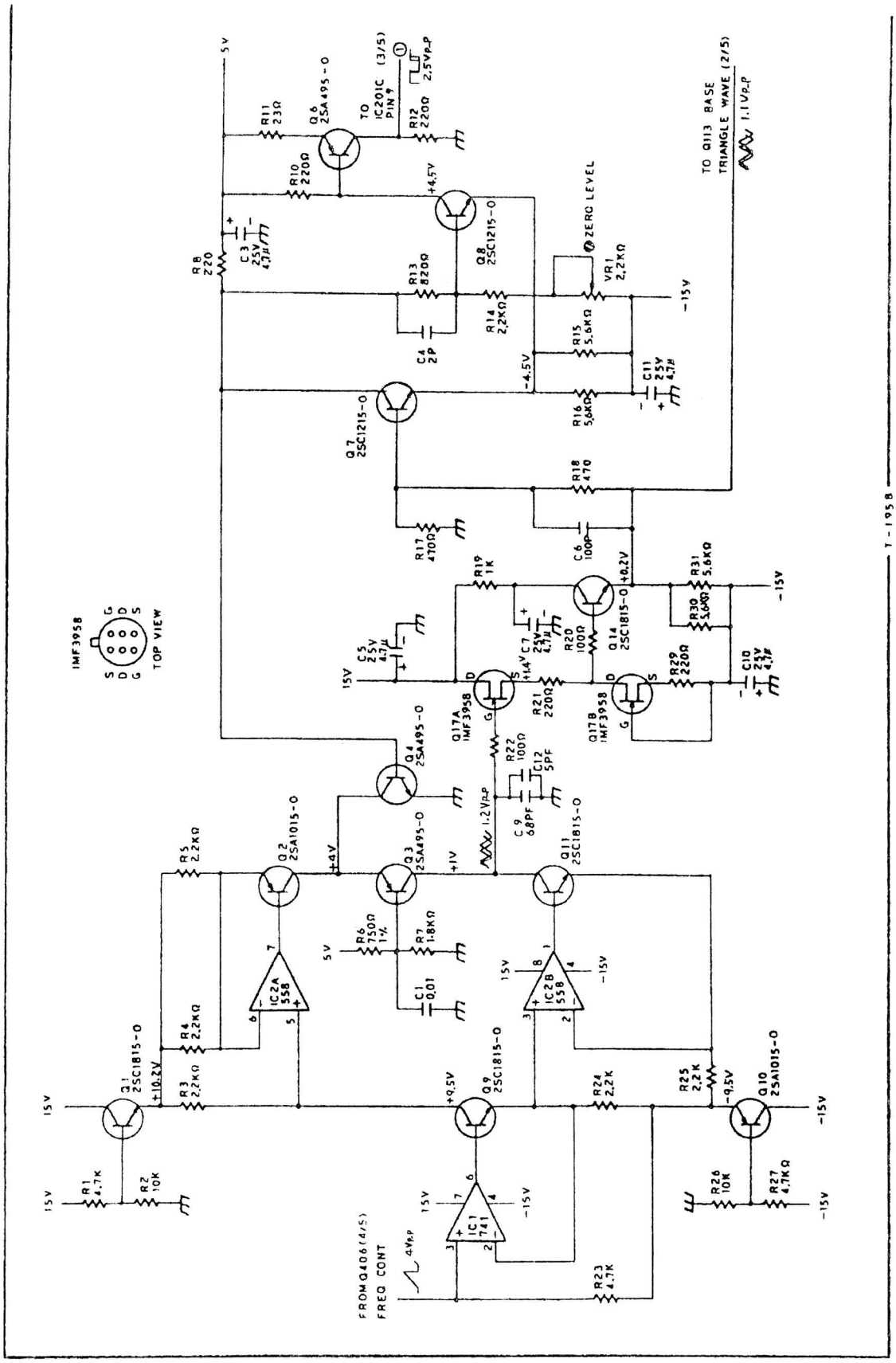
Sweep Oscillator
(1/5)
T-1958
TO IC201C (3/5) PIN 9
2.5Vp-p
TO Q113 BASE
TRIANGLE WAVE (2/5)
1.1Vp-p
ZERO LEVEL
FROM Q406(4/5)
FREQ CONT
4Vp-p
1.2Vp-p
IMF3958
TOP VIEW
Q1 2SC1815-O
Q2 2SA1015-O
Q3 2SA495-O
Q4 2SA495-O
Q6 2SA495-O
Q7 2SC1215-O
Q8 2SC1215-O
Q9 2SC1815-O
Q10 2SA1015-O
Q11 2SC1815-O
Q14 2SC1815-O
Q17A IMF3958
Q17B IMF3958
IC1 741
IC2A 558
IC2B 558
VR1 2.2KΩ

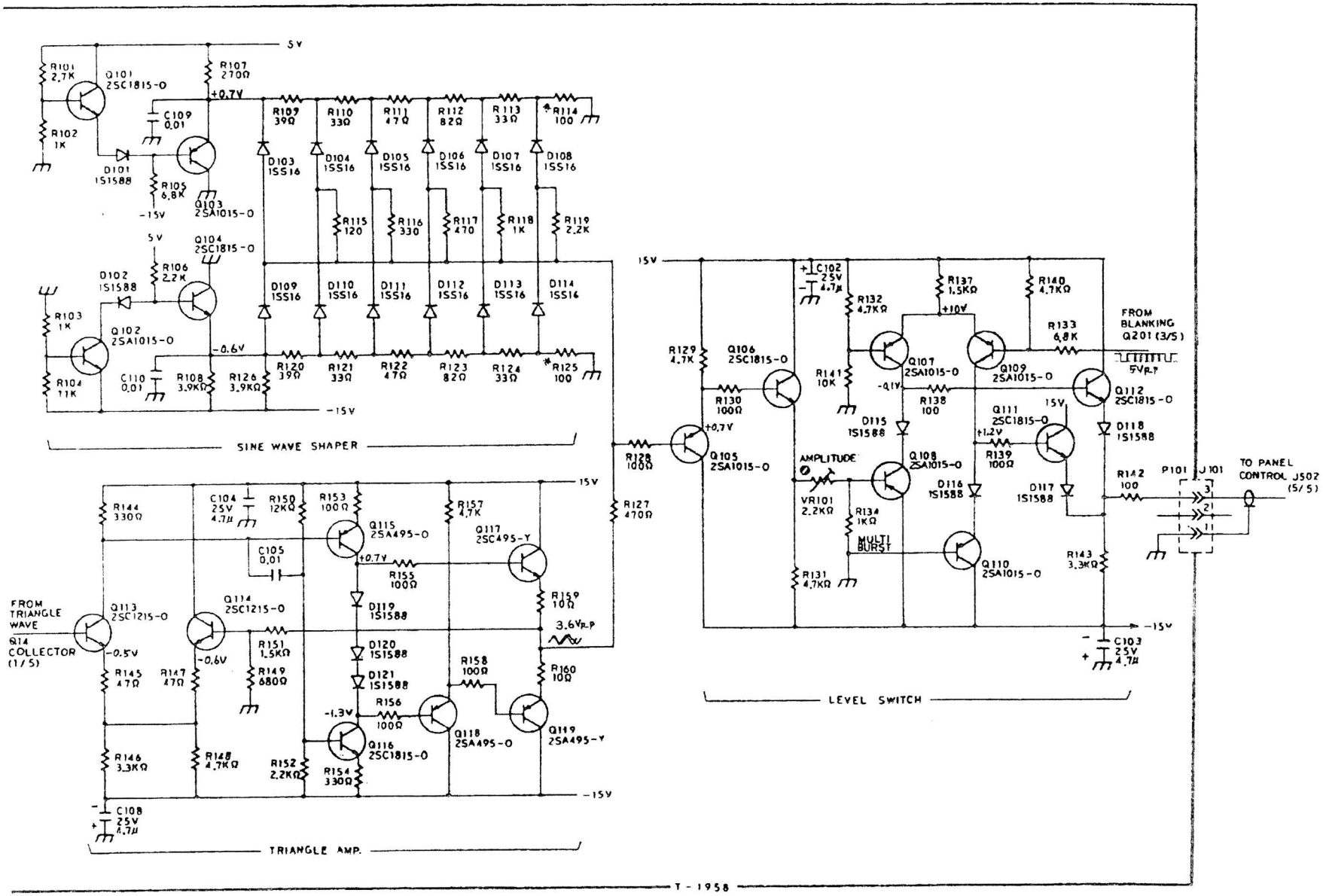

Sine Wave Amplifier

(2/5)

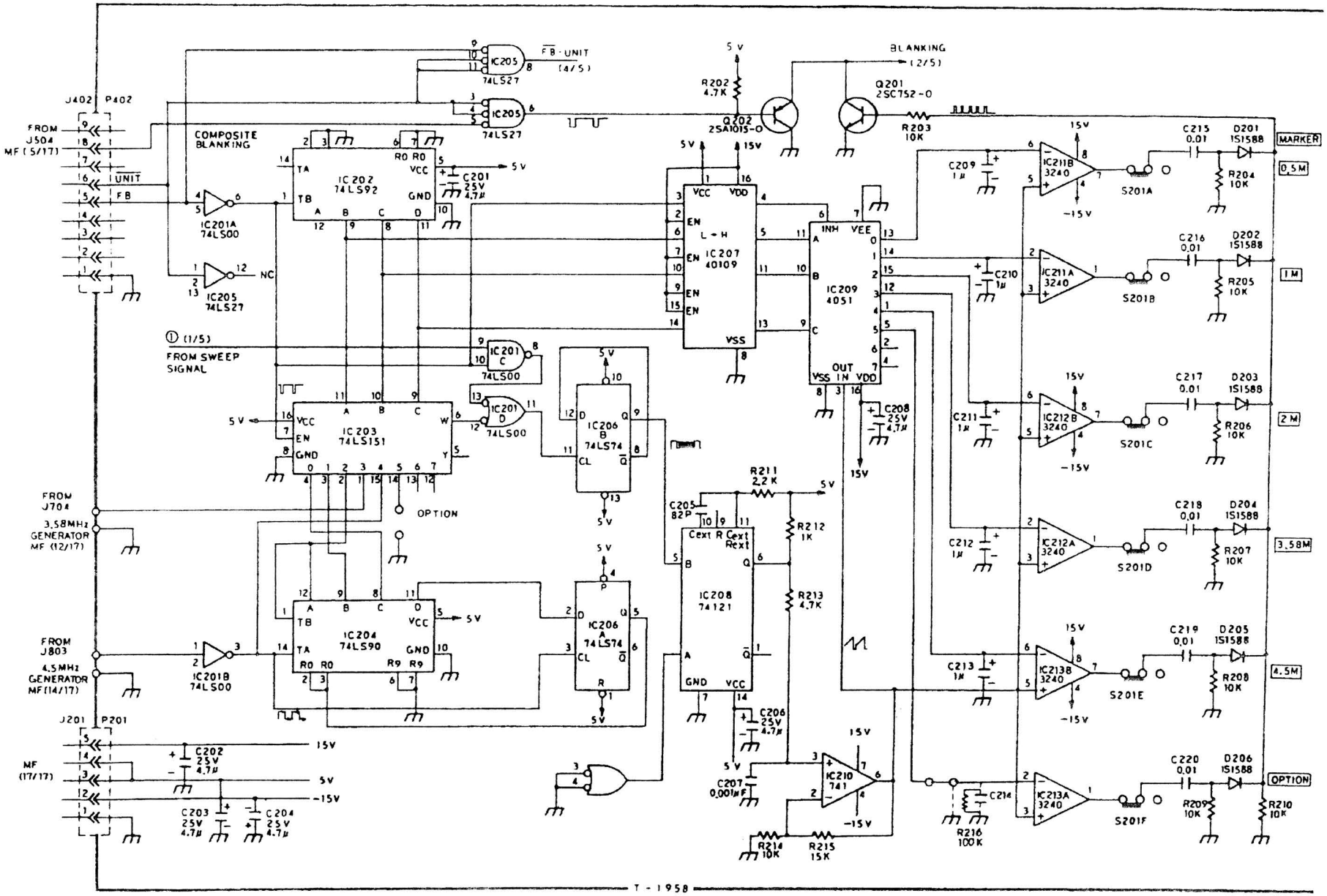

Marker Generator (3/5)

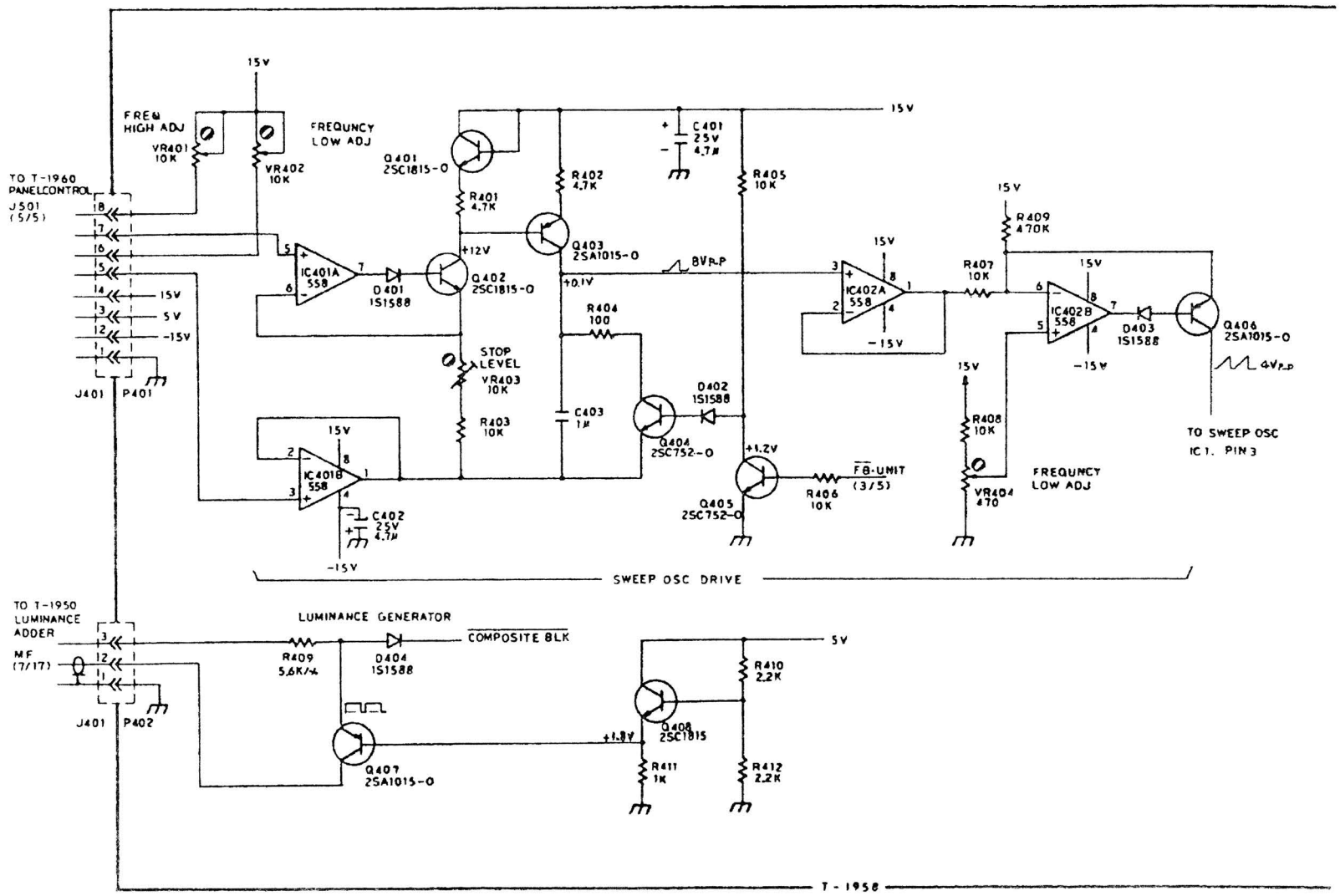

Sweep Oscillator Driver
Luminance Generator

(4/5)

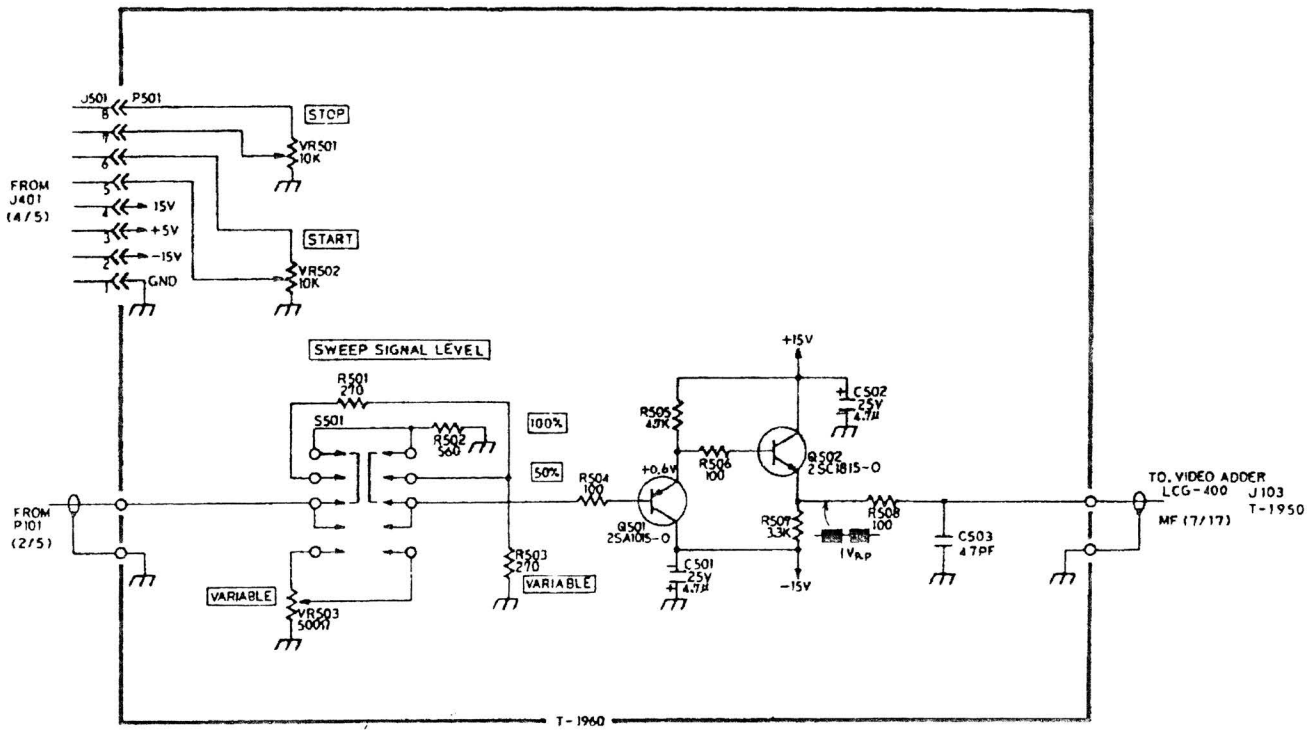

Panel Controls

(5/5)

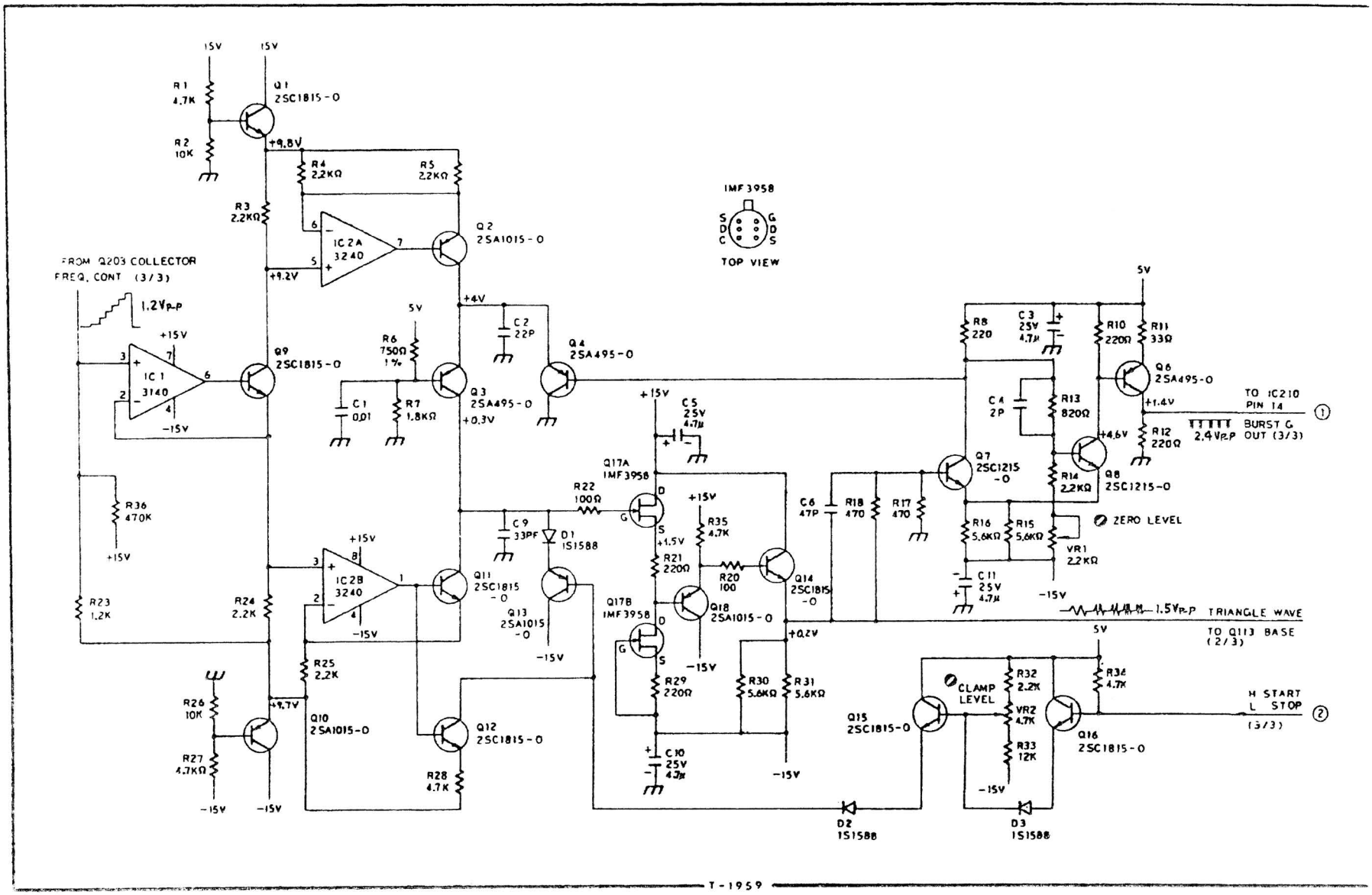

Multi Burst Oscillator (1/3)

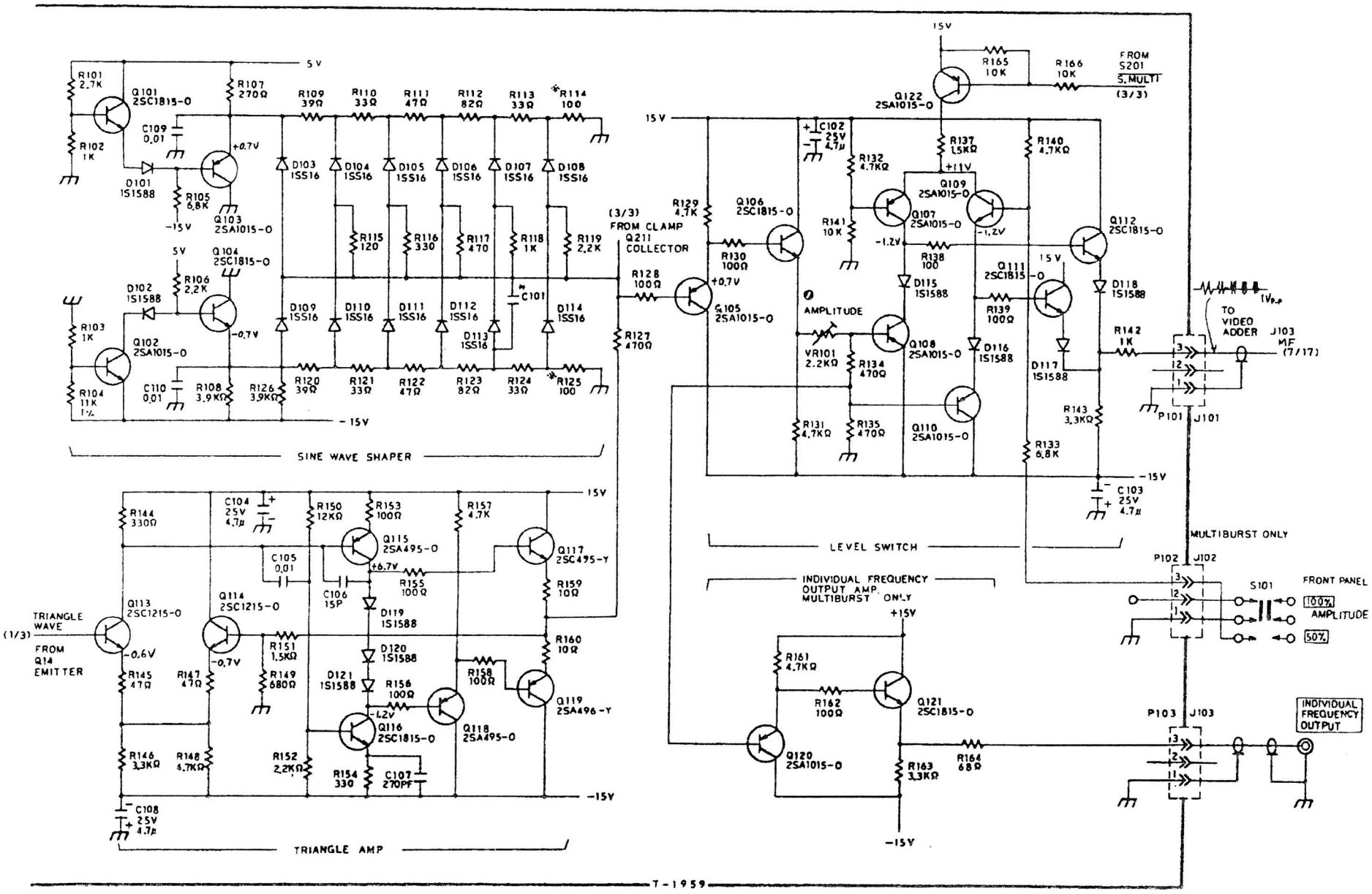

Sine Wave Amplifier

(2/3)

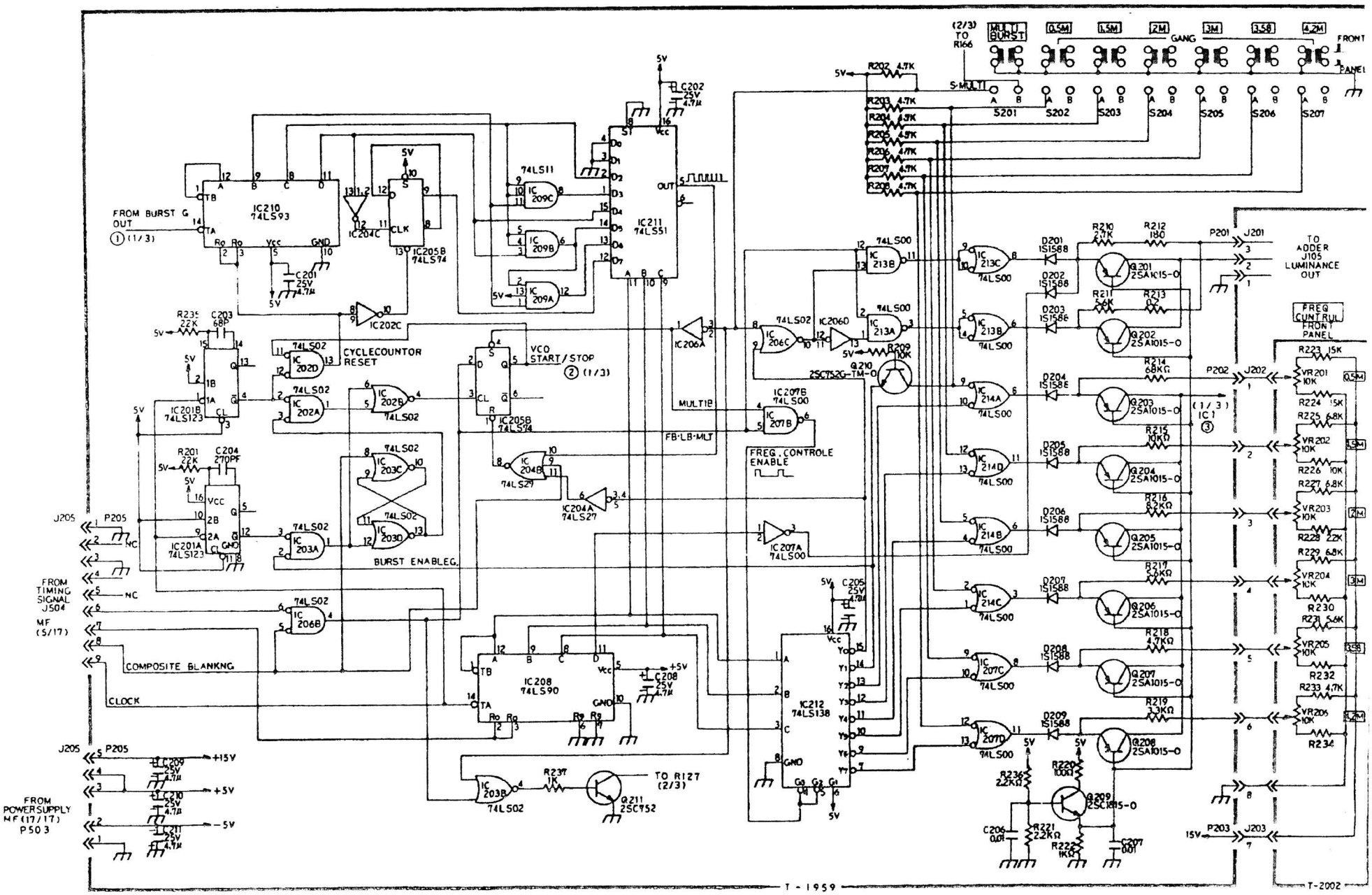

Multiburst Control (3/3)

No.	LDR PT No.	DESCRIPTION			
*** MAIN FRAME ***					
-RESISTORS-					
R1	1010101002	CARBON FILM	100 OHM	5%	1/4W
R2	1010102004	CARBON FILM	1K OHM	5%	1/4W
R3	1010102004	CARBON FILM	1K OHM	5%	1/4W
R4	1010102004	CARBON FILM	1K OHM	5%	1/4W
R5	1010102004	CARBON FILM	1K OHM	5%	1/4W
R6	1010102004	CARBON FILM	1K OHM	5%	1/4W
R7	1010102004	CARBON FILM	1K OHM	5%	1/4W
R8	1010102004	CARBON FILM	1K OHM	5%	1/4W
R9	1010102004	CARBON FILM	1K OHM	5%	1/4W
R10	1010471005	CARBON FILM	470 OHM	5%	1/4W
R11	1010332001	CARBON FILM	3.3K OHM	5%	1/4W
R12	1010332001	CARBON FILM	3.3K OHM	5%	1/4W
R13	1010471005	CARBON FILM	470 OHM	5%	1/4W
R14	1010102004	CARBON FILM	1K OHM	5%	1/4W
R15	1010471005	CARBON FILM	470 OHM	5%	1/4W
R16	1010471005	CARBON FILM	470 OHM	5%	1/4W
R17	1010471005	CARBON FILM	470 OHM	5%	1/4W
R18	1010471005	CARBON FILM	470 OHM	5%	1/4W
R50	1010103006	CARBON FILM	10K OHM	5%	1/4W
R51	1010101002	CARBON FILM	100 OHM	5%	1/4W
R52	1010392009	CARBON FILM	3.9K OHM	5%	1/4W
R53	1010101002	CARBON FILM	100 OHM	5%	1/4W
R54	1010332001	CARBON FILM	3.3K OHM	5%	1/4W
R55	1010123002	CARBON FILM	12K OHM	5%	1/4W
R56	1010562008	CARBON FILM	5.6K OHM	5%	1/4W
R57	1010153001	CARBON FILM	15K OHM	5%	1/4W
R58	1010223006	CARBON FILM	22K OHM	5%	1/4W
R59	1010103006	CARBON FILM	10K OHM	5%	1/4W
R60	1010153001	CARBON FILM	15K OHM	5%	1/4W
R61	1010332001	CARBON FILM	3.3K OHM	5%	1/4W
R62	1010332001	CARBON FILM	3.3K OHM	5%	1/4W
R63	1010333003	CARBON FILM	33K OHM	5%	1/4W
R64	1010101002	CARBON FILM	100 OHM	5%	1/4W
R65	1010222004	CARBON FILM	2.2K OHM	5%	1/4W
R66	1010222004	CARBON FILM	2.2K OHM	5%	1/4W
R67	1010562008	CARBON FILM	5.6K OHM	5%	1/4W
R68	1010103006	CARBON FILM	10K OHM	5%	1/4W
R69	1010102004	CARBON FILM	1K OHM	5%	1/4W
R70	1010103006	CARBON FILM	10K OHM	5%	1/4W
R71	1010103006	CARBON FILM	10K OHM	5%	1/4W
R72	1010562008	CARBON FILM	5.6K OHM	5%	1/4W
R73	1010182008	CARBON FILM	1.8K OHM	5%	1/4W
R74	1010103006	CARBON FILM	10K OHM	5%	1/4W
R75	1010472007	CARBON FILM	4.7K OHM	5%	1/4W
R76	1010472007	CARBON FILM	4.7K OHM	5%	1/4W
R77	1010470003	CARBON FILM	47 OHM	5%	1/4W
R78	1010182008	CARBON FILM	1.8K OHM	5%	1/4W
R79	1010222004	CARBON FILM	2.2K OHM	5%	1/4W
R80	1010103006	CARBON FILM	10K OHM	5%	1/4W
R81	1010101002	CARBON FILM	100 OHM	5%	1/4W
R82	1010472007	CARBON FILM	4.7K OHM	5%	1/4W
R83	1010101002	CARBON FILM	100 OHM	5%	1/4W
R84	1010332001	CARBON FILM	3.3K OHM	5%	1/4W
R85	1010562008	CARBON FILM	5.6K OHM	5%	1/4W
R86	1010153001	CARBON FILM	15K OHM	5%	1/4W

No.	LDR PT No.	DESCRIPTION			
(M.FRAME CONT'D)					
R87	1010223006	CARBON FILM	22K OHM	5%	1/4W
R88	1010103006	CARBON FILM	10K OHM	5%	1/4W
R89	1010153001	CARBON FILM	15K OHM	5%	1/4W
R90	1010332001	CARBON FILM	3.3K OHM	5%	1/4W
R91	1010332001	CARBON FILM	3.3K OHM	5%	1/4W
R92	1010333003	CARBON FILM	33K OHM	5%	1/4W
R93	1010101002	CARBON FILM	100 OHM	5%	1/4W
R94	1010222004	CARBON FILM	2.2K OHM	5%	1/4W
R95	1010222004	CARBON FILM	2.2K OHM	5%	1/4W
R96	1010562008	CARBON FILM	5.6K OHM	5%	1/4W
R97	1010103006	CARBON FILM	10K OHM	5%	1/4W
R98	1010333003	CARBON FILM	33K OHM	5%	1/4W
R99	1010123002	CARBON FILM	12K OHM	5%	1/4W
R101	1311202008	METAL FILM	12K OHM	1%	1/4W
R102	1316201006	METAL FILM	6.2K OHM	1%	1/4W
R103	1313002002	METAL FILM	30K OHM	1%	1/4W
R104	1312701002	METAL FILM	2.7K OHM	1%	1/4W
R105	1311102004	METAL FILM	11K OHM	1%	1/4W
R106	1311302002	METAL FILM	13K OHM	1%	1/4W
R107	1316801000	METAL FILM	6.8K OHM	1%	1/4W
R108	1313301002	METAL FILM	3.3K OHM	1%	1/4W
R109	1010471005	CARBON FILM	470 OHM	5%	1/4W
R110	1010151007	CARBON FILM	150 OHM	5%	1/4W
R111	1010272009	CARBON FILM	2.7K OHM	5%	1/4W
R112	1010820004	CARBON FILM	82 OHM	5%	1/4W
R113	1010151007	CARBON FILM	150 OHM	5%	1/4W
R114	1010153001	CARBON FILM	15K OHM	5%	1/4W
R115	1010272009	CARBON FILM	2.7K OHM	5%	1/4W
R117	1010821006	CARBON FILM	820 OHM	5%	1/4W
R118	1010151007	CARBON FILM	150 OHM	5%	1/4W
R119	1010181006	CARBON FILM	180 OHM	5%	1/4W
R120	1315601006	METAL FILM	5.6K OHM	1%	1/4W
R121	1315601006	METAL FILM	5.6K OHM	1%	1/4W
R122	1010101002	CARBON FILM	100 OHM	5%	1/4W
R123	1010102004	CARBON FILM	1K OHM	5%	1/4W
R124	1010101002	CARBON FILM	100 OHM	5%	1/4W
R125	1312201002	METAL FILM	2.2K OHM	1%	1/4W
R126	1010102004	CARBON FILM	1K OHM	5%	1/4W
R127	1312201002	METAL FILM	2.2K OHM	1%	1/4W
R128	1010332001	CARBON FILM	3.3K OHM	5%	1/4W
R129	1010101002	CARBON FILM	100 OHM	5%	1/4W
R130	1010682008	CARBON FILM	6.8K OHM	5%	1/4W
R131	1010272009	CARBON FILM	2.7K OHM	5%	1/4W
R132	1010123002	CARBON FILM	12K OHM	5%	1/4W
R133	1010470003	CARBON FILM	47 OHM	5%	1/4W
R134	1010392009	CARBON FILM	3.9K OHM	5%	1/4W
R135	1315601006	METAL FILM	5.6K OHM	1%	1/4W
R136	1010472007	CARBON FILM	4.7K OHM	5%	1/4W
R137	1315601006	METAL FILM	5.6K OHM	1%	1/4W
R138	1010821006	CARBON FILM	820 OHM	5%	1/4W
R139	1010820004	CARBON FILM	82 OHM	5%	1/4W
R140	1010101002	CARBON FILM	100 OHM	5%	1/4W
R141	1010222004	CARBON FILM	2.2K OHM	5%	1/4W
R142	1010101002	CARBON FILM	100 OHM	5%	1/4W
R143	1010332001	CARBON FILM	3.3K OHM	5%	1/4W
R144	1010332001	CARBON FILM	3.3K OHM	5%	1/4W
R145	1010100000	CARBON FILM	10 OHM	5%	1/4W

No.	LDR PT No.	DESCRIPTION			
(M.FRAME	CONT'D)				
R146	1010101002	CARBON FILM	100 OHM	5%	1/4W
R147	1010100000	CARBON FILM	10 OHM	5%	1/4W
R148	1010222004	CARBON FILM	2.2K OHM	5%	1/4W
R149	1010222004	CARBON FILM	2.2K OHM	5%	1/4W
R150	1010221002	CARBON FILM	220 OHM	5%	1/4W
R151	1010102004	CARBON FILM	1K OHM	5%	1/4W
R152	1010123002	CARBON FILM	12K OHM	5%	1/4W
R153	1010222004	CARBON FILM	2.2K OHM	5%	1/4W
R160	1010472007	CARBON FILM	4.7K OHM	5%	1/4W
R161	1010122000	CARBON FILM	1.2K OHM	5%	1/4W
R162	1010222004	CARBON FILM	2.2K OHM	5%	1/4W
R163	1010332001	CARBON FILM	3.3K OHM	5%	1/4W
R164	1010332001	CARBON FILM	3.3K OHM	5%	1/4W
R165	1010100000	CARBON FILM	10 OHM	5%	1/4W
R166	1010470003	CARBON FILM	47 OHM	5%	1/4W
R167	1010101002	CARBON FILM	100 OHM	5%	1/4W
R168	1010332001	CARBON FILM	3.3K OHM	5%	1/4W
R169	1010273001	CARBON FILM	27K OHM	5%	1/4W
R170	1010102004	CARBON FILM	1K OHM	5%	1/4W
R201	1010332001	CARBON FILM	3.3K OHM	5%	1/4W
R202	1010101002	CARBON FILM	100 OHM	5%	1/4W
R203	1010101002	CARBON FILM	100 OHM	5%	1/4W
R204	1010103006	CARBON FILM	10K OHM	5%	1/4W
R205	1010471005	CARBON FILM	470 OHM	5%	1/4W
R206	1010472007	CARBON FILM	4.7K OHM	5%	1/4W
R301	1313601004	METAL FILM	3.60K OHM	1%	1/4W
R302	1311502000	METAL FILM	15K OHM	1%	1/4W
R303	1314301008	METAL FILM	4.3K OHM	1%	1/4W
R304	1317501004	METAL FILM	7.5K OHM	1%	1/4W
R305	1312202004	METAL FILM	22K OHM	1%	1/4W
R306	1315101006	METAL FILM	5.1K OHM	1%	1/4W
R307	1311102004	METAL FILM	11K OHM	1%	1/4W
R308	1316801000	METAL FILM	6.8K OHM	1%	1/4W
R309	1316801000	METAL FILM	6.8K OHM	1%	1/4W
R310	1311102004	METAL FILM	11K OHM	1%	1/4W
R311	1315601006	METAL FILM	5.6K OHM	1%	1/4W
R312	1317501004	METAL FILM	7.5K OHM	1%	1/4W
R313	1010121008	CARBON FILM	120 OHM	5%	1/4W
R314	1010561006	CARBON FILM	560 OHM	5%	1/4W
R315	1010151007	CARBON FILM	150 OHM	5%	1/4W
R316	1314300006	METAL FILM	430 OHM	1%	1/4W
R317	1010102004	CARBON FILM	1K OHM	5%	1/4W
R318	1010151007	CARBON FILM	150 OHM	5%	1/4W
R319	1010820004	CARBON FILM	82 OHM	5%	1/4W
R320	1010391007	CARBON FILM	390 OHM	5%	1/4W
R321	1010391007	CARBON FILM	390 OHM	5%	1/4W
R322	1010820004	CARBON FILM	82 OHM	5%	1/4W
R323	1314300006	METAL FILM	430 OHM	1%	1/4W
R324	1315100004	METAL FILM	510 OHM	1%	1/4W
R325	1010224008	CARBON FILM	220K OHM	5%	1/4W
R326	1010224008	CARBON FILM	220K OHM	5%	1/4W
R327	1313900004	METAL FILM	390 OHM	1%	1/4W
R328	1313900004	METAL FILM	390 OHM	1%	1/4W
R329	1316801000	METAL FILM	6.8K OHM	1%	1/4W
R330	1316801000	METAL FILM	6.8K OHM	1%	1/4W
R331	1010101002	CARBON FILM	100 OHM	5%	1/4W
R332	1010101002	CARBON FILM	100 OHM	5%	1/4W

No.	LDR PT No.	DESCRIPTION			
(M.FRAME	CONT'D)				
R333	1311001008	METAL FILM	1K OHM	1%	1/4W
R334	1311001008	METAL FILM	1K OHM	1%	1/4W
R335	1315601006	METAL FILM	5.6K OHM	1%	1/4W
R336	1010152009	CARBON FILM	1.5K OHM	5%	1/4W
R337	1010152009	CARBON FILM	1.5K OHM	5%	1/4W
R338	1010103006	CARBON FILM	10K OHM	5%	1/4W
R339	1010103006	CARBON FILM	10K OHM	5%	1/4W
R340	1010391007	CARBON FILM	390 OHM	5%	1/4W
R341	1010152009	CARBON FILM	1.5K OHM	5%	1/4W
R342	1010471005	CARBON FILM	470 OHM	5%	1/4W
R344	1010562008	CARBON FILM	5.6K OHM	5%	1/4W
R345	1010224008	CARBON FILM	220K OHM	5%	1/4W
R346	1010224008	CARBON FILM	220K OHM	5%	1/4W
R347	1313900004	METAL FILM	390 OHM	1%	1/4W
R348	1313900004	METAL FILM	390 OHM	1%	1/4W
R349	1316801000	METAL FILM	6.8K OHM	1%	1/4W
R350	1316801000	METAL FILM	6.8K OHM	1%	1/4W
R351	1010101002	CARBON FILM	100 OHM	5%	1/4W
R352	1010101002	CARBON FILM	100 OHM	5%	1/4W
R353	1311001008	METAL FILM	1K OHM	1%	1/4W
R354	1311001008	METAL FILM	1K OHM	1%	1/4W
R355	1315601006	METAL FILM	5.6K OHM	1%	1/4W
R356	1010101002	CARBON FILM	100 OHM	5%	1/4W
R357	1010101002	CARBON FILM	100 OHM	5%	1/4W
R358	1010101002	CARBON FILM	100 OHM	5%	1/4W
R359	1010221002	CARBON FILM	220 OHM	5%	1/4W
R360	1010471005	CARBON FILM	470 OHM	5%	1/4W
R361	1010221002	CARBON FILM	220 OHM	5%	1/4W
R362	1010471005	CARBON FILM	470 OHM	5%	1/4W
R363	1010101002	CARBON FILM	100 OHM	5%	1/4W
R364	1010101002	CARBON FILM	100 OHM	5%	1/4W
R365	1010221002	CARBON FILM	220 OHM	5%	1/4W
R366	1010471005	CARBON FILM	470 OHM	5%	1/4W
R367	1010221002	CARBON FILM	220 OHM	5%	1/4W
R368	1010471005	CARBON FILM	470 OHM	5%	1/4W
R369	1010470003	CARBON FILM	47 OHM	5%	1/4W
R370	1010470003	CARBON FILM	47 OHM	5%	1/4W
R371	1010682008	CARBON FILM	6.8K OHM	5%	1/4W
R372	1010332001	CARBON FILM	3.3K OHM	5%	1/4W
R373	1010562008	CARBON FILM	5.6K OHM	5%	1/4W
R374	1010471005	CARBON FILM	470 OHM	5%	1/4W
R375	1010101002	CARBON FILM	100 OHM	5%	1/4W
R401	1010123002	CARBON FILM	12K OHM	5%	1/4W
R402	1010222004	CARBON FILM	2.2K OHM	5%	1/4W
R406	1010222004	CARBON FILM	2.2K OHM	5%	1/4W
R407	1010332001	CARBON FILM	3.3K OHM	5%	1/4W
R408	1010822008	CARBON FILM	8.2K OHM	5%	1/4W
R409	1000222007	CARBON FILM	2.2K OHM	5%	1/6W
R410	1010332001	CARBON FILM	3.3K OHM	5%	1/4W
R412	1010223006	CARBON FILM	22K OHM	5%	1/4W
R413	1010103006	CARBON FILM	10K OHM	5%	1/4W
R414	1010223006	CARBON FILM	22K OHM	5%	1/4W
R415	1010103006	CARBON FILM	10K OHM	5%	1/4W
R416	1010471005	CARBON FILM	470 OHM	5%	1/4W
R417	1010471005	CARBON FILM	470 OHM	5%	1/4W
R418	1010101002	CARBON FILM	100 OHM	5%	1/4W
R419	1010472007	CARBON FILM	4.7K OHM	5%	1/4W

No.	LDR PT No.	DESCRIPTION			
(M.FRAME CONT'D)					
R420	1010471005	CARBON FILM	470 OHM	5%	1/4W
R421	1010102004	CARBON FILM	1K OHM	5%	1/4W
R422	1010562008	CARBON FILM	5.6K OHM	5%	1/4W
R423	1010472007	CARBON FILM	4.7K OHM	5%	1/4W
R424	1010472007	CARBON FILM	4.7K OHM	5%	1/4W
R425	1010472007	CARBON FILM	4.7K OHM	5%	1/4W
R426	1010472007	CARBON FILM	4.7K OHM	5%	1/4W
R427	1010222004	CARBON FILM	2.2K OHM	5%	1/4W
R428	1010222004	CARBON FILM	2.2K OHM	5%	1/4W
R429	1010222004	CARBON FILM	2.2K OHM	5%	1/4W
R430	1010332001	CARBON FILM	3.3K OHM	5%	1/4W
R431	1010822008	CARBON FILM	8.2K OHM	5%	1/4W
R432	1010223006	CARBON FILM	22K OHM	5%	1/4W
R433	1010223006	CARBON FILM	22K OHM	5%	1/4W
R434	1010332001	CARBON FILM	3.3K OHM	5%	1/4W
R436	1010222004	CARBON FILM	2.2K OHM	5%	1/4W
R438	1010223006	CARBON FILM	22K OHM	5%	1/4W
R439	1010103006	CARBON FILM	10K OHM	5%	1/4W
R440	1010223006	CARBON FILM	22K OHM	5%	1/4W
R441	1010103006	CARBON FILM	10K OHM	5%	1/4W
R442	1010471005	CARBON FILM	470 OHM	5%	1/4W
R443	1010471005	CARBON FILM	470 OHM	5%	1/4W
R444	1010101002	CARBON FILM	100 OHM	5%	1/4W
R445	1010472007	CARBON FILM	4.7K OHM	5%	1/4W
R446	1010471005	CARBON FILM	470 OHM	5%	1/4W
R447	1000222007	CARBON FILM	2.2K OHM	5%	1/6W
R448	1000223009	CARBON FILM	22K OHM	5%	1/6W
R448	1010151007	CARBON FILM	150 OHM	5%	1/4W
R449	1010821006	CARBON FILM	820 OHM	5%	1/4W
R450	1010472007	CARBON FILM	4.7K OHM	5%	1/4W
R451	1010471005	CARBON FILM	470 OHM	5%	1/4W
R452	1010471005	CARBON FILM	470 OHM	5%	1/4W
R453	1010103006	CARBON FILM	10K OHM	5%	1/4W
R454	1010103006	CARBON FILM	10K OHM	5%	1/4W
R455	1010102004	CARBON FILM	1K OHM	5%	1/4W
R456	1010103006	CARBON FILM	10K OHM	5%	1/4W
R457	1010103006	CARBON FILM	10K OHM	5%	1/4W
R458	1010102004	CARBON FILM	1K OHM	5%	1/4W
R459	1010472007	CARBON FILM	4.7K OHM	5%	1/4W
R651	1010103006	CARBON FILM	10K OHM	5%	1/4W
R652	1010103006	CARBON FILM	10K OHM	5%	1/4W
R653	1010562008	CARBON FILM	5.6K OHM	5%	1/4W
R654	1010101002	CARBON FILM	100 OHM	5%	1/4W
R655	1010682008	CARBON FILM	6.8K OHM	5%	1/4W
R656	1010103006	CARBON FILM	10K OHM	5%	1/4W
R657	1010471005	CARBON FILM	470 OHM	5%	1/4W
R658	1010332001	CARBON FILM	3.3K OHM	5%	1/4W
R659	1010332001	CARBON FILM	3.3K OHM	5%	1/4W
R660	1010182008	CARBON FILM	1.8K OHM	5%	1/4W
R661	1010101002	CARBON FILM	100 OHM	5%	1/4W
R662	1010273001	CARBON FILM	27K OHM	5%	1/4W
R663	1010103006	CARBON FILM	10K OHM	5%	1/4W
R664	1010472007	CARBON FILM	4.7K OHM	5%	1/4W
R665	1010102004	CARBON FILM	1K OHM	5%	1/4W
R666	1010153001	CARBON FILM	15K OHM	5%	1/4W
R667	1010102004	CARBON FILM	1K OHM	5%	1/4W
R693	1010471005	CARBON FILM	470 OHM	5%	1/4W

No.	LDR PT No.	DESCRIPTION			
(M.FRAME CONT'D)					
R694	1010101002	CARBON FILM	100 OHM	5%	1/4W
R695	1010101002	CARBON FILM	100 OHM	5%	1/4W
R696	1010562008	CARBON FILM	5.6K OHM	5%	1/4W
R697	1010101002	CARBON FILM	100 OHM	5%	1/4W
R698	1010472007	CARBON FILM	4.7K OHM	5%	1/4W
R699	1010472007	CARBON FILM	4.7K OHM	5%	1/4W
R700	1010101002	CARBON FILM	100 OHM	5%	1/4W
R701	1010562008	CARBON FILM	5.6K OHM	5%	1/4W
R702	1010151007	CARBON FILM	150 OHM	5%	1/4W
R702	1010562008	CARBON FILM	5.6K OHM	5%	1/4W
R703	1010562008	CARBON FILM	5.6K OHM	5%	1/4W
R704	1010151007	CARBON FILM	150 OHM	5%	1/4W
R704	1010562008	CARBON FILM	5.6K OHM	5%	1/4W
R705	1010272009	CARBON FILM	2.7K OHM	5%	1/4W
R706	1010562008	CARBON FILM	5.6K OHM	5%	1/4W
R707	1010272009	CARBON FILM	2.7K OHM	5%	1/4W
R708	1010562008	CARBON FILM	5.6K OHM	5%	1/4W
R709	1010272009	CARBON FILM	2.7K OHM	5%	1/4W
R710	1010562008	CARBON FILM	5.6K OHM	5%	1/4W
R711	1010272009	CARBON FILM	2.7K OHM	5%	1/4W
R712	1010562008	CARBON FILM	5.6K OHM	5%	1/4W
R713	1010562008	CARBON FILM	5.6K OHM	5%	1/4W
R714	1010272009	CARBON FILM	2.7K OHM	5%	1/4W
R715	1010101002	CARBON FILM	100 OHM	5%	1/4W
R716	1010123002	CARBON FILM	12K OHM	5%	1/4W
R717	1010562008	CARBON FILM	5.6K OHM	5%	1/4W
R718	1010101002	CARBON FILM	100 OHM	5%	1/4W
R719	1010562008	CARBON FILM	5.6K OHM	5%	1/4W
R720	1010332001	CARBON FILM	3.3K OHM	5%	1/4W
R721	1020682005	CARBON FILM	6.8K OHM	5%	1/2W
R722	1020682005	CARBON FILM	6.8K OHM	5%	1/2W
R723	1020682005	CARBON FILM	6.8K OHM	5%	1/2W
R724	1020682005	CARBON FILM	6.8K OHM	5%	1/2W
R725	1010101002	CARBON FILM	100 OHM	5%	1/4W
R726	1010101002	CARBON FILM	100 OHM	5%	1/4W
R727	1010101002	CARBON FILM	100 OHM	5%	1/4W
R728	1010101002	CARBON FILM	100 OHM	5%	1/4W
R729	1010101002	CARBON FILM	100 OHM	5%	1/4W
R730	1010101002	CARBON FILM	100 OHM	5%	1/4W
R731	1010101002	CARBON FILM	100 OHM	5%	1/4W
R732	1010101002	CARBON FILM	100 OHM	5%	1/4W
R733	1010100000	CARBON FILM	10 OHM	5%	1/4W
R734	1010151007	CARBON FILM	150 OHM	5%	1/4W
R734	1010151007	CARBON FILM	150 OHM	5%	1/4W
R735	1010151007	CARBON FILM	150 OHM	5%	1/4W
R735	1010151007	CARBON FILM	150 OHM	5%	1/4W
R736	1010470003	CARBON FILM	47 OHM	5%	1/4W
R737	1010100000	CARBON FILM	10 OHM	5%	1/4W
R738	1010151007	CARBON FILM	150 OHM	5%	1/4W
R738	1010151007	CARBON FILM	150 OHM	5%	1/4W
R739	1010151007	CARBON FILM	150 OHM	5%	1/4W
R739	1010151007	CARBON FILM	150 OHM	5%	1/4W
R740	1010470003	CARBON FILM	47 OHM	5%	1/4W
R741	1010100000	CARBON FILM	10 OHM	5%	1/4W
R742	1010151007	CARBON FILM	150 OHM	5%	1/4W
R742	1010151007	CARBON FILM	150 OHM	5%	1/4W
R743	1010151007	CARBON FILM	150 OHM	5%	1/4W

No.	LDR PT No.	DESCRIPTION			
(M.FRAME CONT'D)					
R743	1010151007	CARBON FILM	150 OHM	5%	1/4W
R744	1010470003	CARBON FILM	47 OHM	5%	1/4W
R745	1010100000	CARBON FILM	10 OHM	5%	1/4W
R746	1010151007	CARBON FILM	150 OHM	5%	1/4W
R746	1010151007	CARBON FILM	150 OHM	5%	1/4W
R747	1010151007	CARBON FILM	150 OHM	5%	1/4W
R747	1010151007	CARBON FILM	150 OHM	5%	1/4W
R748	1010470003	CARBON FILM	47 OHM	5%	1/4W
R749	1010272009	CARBON FILM	2.7K OHM	5%	1/4W
R750	1010102004	CARBON FILM	1K OHM	5%	1/4W
R751	1010392009	CARBON FILM	3.9K OHM	5%	1/4W
R752	1010103006	CARBON FILM	10K OHM	5%	1/4W
R753	1010101002	CARBON FILM	100 OHM	5%	1/4W
R754	1010472007	CARBON FILM	4.7K OHM	5%	1/4W
R755	1010472007	CARBON FILM	4.7K OHM	5%	1/4W
R756	1010101002	CARBON FILM	100 OHM	5%	1/4W
R757	1010101002	CARBON FILM	100 OHM	5%	1/4W
R758	1010100000	CARBON FILM	10 OHM	5%	1/4W
R759	1010152009	CARBON FILM	1.5K OHM	5%	1/4W
R760	1010330007	CARBON FILM	33 OHM	5%	1/4W
R761	1010151007	CARBON FILM	150 OHM	5%	1/4W
R762	1010151007	CARBON FILM	150 OHM	5%	1/4W
R763	1010472007	CARBON FILM	4.7K OHM	5%	1/4W
R764	1010470003	CARBON FILM	47 OHM	5%	1/4W
R765	1010101002	CARBON FILM	100 OHM	5%	1/4W
R771	1010102004	CARBON FILM	1K OHM	5%	1/4W
R772	1010102004	CARBON FILM	1K OHM	5%	1/4W
R773	1010102004	CARBON FILM	1K OHM	5%	1/4W
R774	1010102004	CARBON FILM	1K OHM	5%	1/4W
R775	1010472007	CARBON FILM	4.7K OHM	5%	1/4W
R776	1010102004	CARBON FILM	1K OHM	5%	1/4W
R777	1010472007	CARBON FILM	4.7K OHM	5%	1/4W
R778	1010332001	CARBON FILM	3.3K OHM	5%	1/4W
R779	1010471005	CARBON FILM	470 OHM	5%	1/4W
R780	1010101002	CARBON FILM	100 OHM	5%	1/4W
R781	1010103006	CARBON FILM	10K OHM	5%	1/4W
R782	1010102004	CARBON FILM	1K OHM	5%	1/4W
R783	1010102004	CARBON FILM	1K OHM	5%	1/4W
R784	1317509000	METAL FILM	75 OHM	1%	1/4W
R785	1020222001	CARBON FILM	2.2K OHM	5%	1/2W
R786	1010103006	CARBON FILM	10K OHM	5%	1/4W
R787	1010101002	CARBON FILM	100 OHM	5%	1/4W
R788	1010102004	CARBON FILM	1K OHM	5%	1/4W
R789	1010102004	CARBON FILM	1K OHM	5%	1/4W
R790	1010102004	CARBON FILM	1K OHM	5%	1/4W
R791	1010153001	CARBON FILM	15K OHM	5%	1/4W
R792	1010823000	CARBON FILM	82K OHM	5%	1/4W
R801	1010103006	CARBON FILM	10K OHM	5%	1/4W
R802	1010103006	CARBON FILM	10K OHM	5%	1/4W
R803	1010103006	CARBON FILM	10K OHM	5%	1/4W
R804	1010102004	CARBON FILM	1K OHM	5%	1/4W
R805	1010103006	CARBON FILM	10K OHM	5%	1/4W
R806	1010471005	CARBON FILM	470 OHM	5%	1/4W
R807	1010104008	CARBON FILM	100K OHM	5%	1/4W
R808	1010103006	CARBON FILM	10K OHM	5%	1/4W
R809	1010103006	CARBON FILM	10K OHM	5%	1/4W
R810	1010103006	CARBON FILM	10K OHM	5%	1/4W

No.	LDR PT No.	DESCRIPTION			
(M.FRAME CONT'D)					
R811	1010105000	CARBON FILM	1M OHM	5%	1/4W
R812	1010105000	CARBON FILM	1M OHM	5%	1/4W
R813	1010101002	CARBON FILM	100 OHM	5%	1/4W
R814	1010472007	CARBON FILM	4.7K OHM	5%	1/4W
R815	1010102004	CARBON FILM	1K OHM	5%	1/4W
R816	1010101002	CARBON FILM	100 OHM	5%	1/4W
R817	1010102004	CARBON FILM	1K OHM	5%	1/4W
R818	1010820004	CARBON FILM	82 OHM	5%	1/4W
R819	1010101002	CARBON FILM	100 OHM	5%	1/4W
R819	1010122000	CARBON FILM	1.2K OHM	5%	1/4W
R820	1010102004	CARBON FILM	1K OHM	5%	1/4W
R821	1311502000	METAL FILM	15K OHM	1%	1/4W
R822	1010102004	CARBON FILM	1K OHM	5%	1/4W
R823	1311502000	METAL FILM	15K OHM	1%	1/4W
R824	1010102004	CARBON FILM	1K OHM	5%	1/4W
R825	1010101002	CARBON FILM	100 OHM	5%	1/4W
R826	1010103006	CARBON FILM	10K OHM	5%	1/4W
R827	1010472007	CARBON FILM	4.7K OHM	5%	1/4W
R828	1010104008	CARBON FILM	100K OHM	5%	1/4W
R829	1010104008	CARBON FILM	100K OHM	5%	1/4W
R830	1010104008	CARBON FILM	100K OHM	5%	1/4W
R831	1010223006	CARBON FILM	22K OHM	5%	1/4W
R832	1010683000	CARBON FILM	68K OHM	5%	1/4W
R833	1010103006	CARBON FILM	10K OHM	5%	1/4W
R834	1010101002	CARBON FILM	100 OHM	5%	1/4W
R835	1010102004	CARBON FILM	1K OHM	5%	1/4W
R836	1010101002	CARBON FILM	100 OHM	5%	1/4W
R837	1010471005	CARBON FILM	470 OHM	5%	1/4W
R851	1010103006	CARBON FILM	10K OHM	5%	1/4W
R852	1010103006	CARBON FILM	10K OHM	5%	1/4W
R853	1010101002	CARBON FILM	100 OHM	5%	1/4W
R854	1010102004	CARBON FILM	1K OHM	5%	1/4W
R855	1010222004	CARBON FILM	2.2K OHM	5%	1/4W
R856	1010103006	CARBON FILM	10K OHM	5%	1/4W
R857	1010103006	CARBON FILM	10K OHM	5%	1/4W
R858	1010102004	CARBON FILM	1K OHM	5%	1/4W
R859	1010222004	CARBON FILM	2.2K OHM	5%	1/4W
R860	1010101002	CARBON FILM	100 OHM	5%	1/4W
R861	1010222004	CARBON FILM	2.2K OHM	5%	1/4W
R862	1010470003	CARBON FILM	47 OHM	5%	1/4W
R863	1010102004	CARBON FILM	1K OHM	5%	1/4W
R864	1010102004	CARBON FILM	1K OHM	5%	1/4W
R865	1010470003	CARBON FILM	47 OHM	5%	1/4W
R866	1010101002	CARBON FILM	100 OHM	5%	1/4W
R867	1010101002	CARBON FILM	100 OHM	5%	1/4W
R868	1010222004	CARBON FILM	2.2K OHM	5%	1/4W
R869	1010471005	CARBON FILM	470 OHM	5%	1/4W
R870	1010102004	CARBON FILM	1K OHM	5%	1/4W
R871	1010101002	CARBON FILM	100 OHM	5%	1/4W
R872	1010102004	CARBON FILM	1K OHM	5%	1/4W
R873	1010101002	CARBON FILM	100 OHM	5%	1/4W
R874	1010101002	CARBON FILM	100 OHM	5%	1/4W
R875	1010101002	CARBON FILM	100 OHM	5%	1/4W
R876	1010102004	CARBON FILM	1K OHM	5%	1/4W
R877	1010472007	CARBON FILM	4.7K OHM	5%	1/4W
R878	1010470003	CARBON FILM	47 OHM	5%	1/4W
R880	1010472007	CARBON FILM	4.7K OHM	5%	1/4W

No.	LDR PT No.	DESCRIPTION				
(M.FRAME CONT'D)						
R881	1010101002	CARBON FILM	100 OHM	5%	1/4W	
R882	1010101002	CARBON FILM	100 OHM	5%	1/4W	
R883	1010333003	CARBON FILM	33K OHM	5%	1/4W	
R884	1010332001	CARBON FILM	3.3K OHM	5%	1/4W	
R885	1010101002	CARBON FILM	100 OHM	5%	1/4W	
R886	1010102004	CARBON FILM	1K OHM	5%	1/4W	
R887	1010103006	CARBON FILM	10K OHM	5%	1/4W	
R889	1010103006	CARBON FILM	10K OHM	5%	1/4W	
R890	1010101002	CARBON FILM	100 OHM	5%	1/4W	
R891	1010101002	CARBON FILM	100 OHM	5%	1/4W	
R893	1010101002	CARBON FILM	100 OHM	5%	1/4W	
R894	1010102004	CARBON FILM	1K OHM	5%	1/4W	
R895	1010221002	CARBON FILM	220 OHM	5%	1/4W	
R896	1010102004	CARBON FILM	1K OHM	5%	1/4W	
R901	1010152009	CARBON FILM	1.5K OHM	5%	1/4W	
R902	1010561006	CARBON FILM	560 OHM	5%	1/4W	
R903	1010102004	CARBON FILM	1K OHM	5%	1/4W	
R904	1010102004	CARBON FILM	1K OHM	5%	1/4W	
R905	1010102004	CARBON FILM	1K OHM	5%	1/4W	
R906	1010102004	CARBON FILM	1K OHM	5%	1/4W	
R907	1010102004	CARBON FILM	1K OHM	5%	1/4W	
R908	1010102004	CARBON FILM	1K OHM	5%	1/4W	
R909	1010102004	CARBON FILM	1K OHM	5%	1/4W	
R910	1010102004	CARBON FILM	1K OHM	5%	1/4W	
R911	1010102004	CARBON FILM	1K OHM	5%	1/4W	
R912	1010561006	CARBON FILM	560 OHM	5%	1/4W	
R913	1010472007	CARBON FILM	4.7K OHM	5%	1/4W	
R914	1010153001	CARBON FILM	15K OHM	5%	1/4W	
R915	1010472007	CARBON FILM	4.7K OHM	5%	1/4W	
R916	1010102004	CARBON FILM	1K OHM	5%	1/4W	
R917	1010472007	CARBON FILM	4.7K OHM	5%	1/4W	
R918	1010102004	CARBON FILM	1K OHM	5%	1/4W	
R919	1010472007	CARBON FILM	4.7K OHM	5%	1/4W	
R920	1010153001	CARBON FILM	15K OHM	5%	1/4W	
R921	1010472007	CARBON FILM	4.7K OHM	5%	1/4W	
R922	1010472007	CARBON FILM	4.7K OHM	5%	1/4W	
R923	1010101002	CARBON FILM	100 OHM	5%	1/4W	
R924	1010101002	CARBON FILM	100 OHM	5%	1/4W	
R925	1010562008	CARBON FILM	5.6K OHM	5%	1/4W	
R926	1010101002	CARBON FILM	100 OHM	5%	1/4W	
R927	1010472007	CARBON FILM	4.7K OHM	5%	1/4W	
R928	1010472007	CARBON FILM	4.7K OHM	5%	1/4W	
R929	1010101002	CARBON FILM	100 OHM	5%	1/4W	
R930	1010562008	CARBON FILM	5.6K OHM	5%	1/4W	
R931	1010151007	CARBON FILM	150 OHM	5%	1/4W	
R932	1010151007	CARBON FILM	150 OHM	5%	1/4W	
R932	1010472007	CARBON FILM	4.7K OHM	5%	1/4W	
R933	1010472007	CARBON FILM	4.7K OHM	5%	1/4W	
R934	1010102004	CARBON FILM	1K OHM	5%	1/4W	
R935	1010102004	CARBON FILM	1K OHM	5%	1/4W	
R936	1010102004	CARBON FILM	1K OHM	5%	1/4W	
R937	1010472007	CARBON FILM	4.7K OHM	5%	1/4W	
R951	1010103006	CARBON FILM	10K OHM	5%	1/4W	
R952	1020109005	CARBON FILM	1 OHM	5%	1/2W	
R953	1010472007	CARBON FILM	4.7K OHM	5%	1/4W	
R954	1010102004	CARBON FILM	1K OHM	5%	1/4W	
R955	1010103006	CARBON FILM	10K OHM	5%	1/4W	

No.	LDR PT No.	DESCRIPTION				
(M.FRAME CONT'D)						
R956	1010471005	CARBON FILM	470 OHM	5%	1/4W	
R957	1010103006	CARBON FILM	10K OHM	5%	1/4W	
R958	1311002000	METAL FILM	10.0K OHM	1%	1/4W	
R959	1311002000	METAL FILM	10.0K OHM	1%	1/4W	
R960	1020109005	CARBON FILM	1 OHM	5%	1/2W	
R701A	1010562008	CARBON FILM	5.6K OHM	5%	1/4W	
R703A	1010472007	CARBON FILM	4.7K OHM	5%	1/4W	
R705A	1010102004	CARBON FILM	1K OHM	5%	1/4W	
R706A	1010472007	CARBON FILM	4.7K OHM	5%	1/4W	
R707A	1010472007	CARBON FILM	4.7K OHM	5%	1/4W	
R708A	1010101002	CARBON FILM	100 OHM	5%	1/4W	
R709A	1010471005	CARBON FILM	470 OHM	5%	1/4W	
R710A	1010472007	CARBON FILM	4.7K OHM	5%	1/4W	
-VARIABLE RESISTORS-						
VR50	1712011009	METAL FILM	22K OHM	25%	1/2W	
VR51	1712010007	METAL FILM	10K OHM	25%	1/2W	
VR52	1712009002	METAL FILM	4.7K OHM	25%	1/2W	
VR53	1712011009	METAL FILM	22K OHM	25%	1/2W	
VR301	1712018003	METAL FILM	1M OHM	25%	1/2W	
VR303	1712018003	METAL FILM	1M OHM	25%	1/2W	
VR401	1712009002	METAL FILM	4.7K OHM	25%	1/2W	
VR402	1712009002	METAL FILM	4.7K OHM	25%	1/2W	
VR751	1712006006	METAL FILM	1K OHM	25%	1/2W	
VR752	1712006006	METAL FILM	1K OHM	25%	1/2W	
VR801	1712006006	METAL FILM	1K OHM	25%	1/2W	
VR802	1712010007	METAL FILM	10K OHM	25%	1/2W	
VR851	1712006006	METAL FILM	1K OHM	25%	1/2W	
VR901	1813048006	CARBON FILM	1K OHM	20%	1/10W	"INPUT LEVEL"
VR902	1813025004	CARBON FILM	10K OHM	20%	1/10W	"HORIZ DELAY"
VR903	1813025004	CARBON FILM	10K OHM	20%	1/10W	"SUBCARR PHASE
VR904	1813026006	CARBON FILM	500 OHM	20%	1/10W	"VARIABLE"
VR905	1813025004	CARBON FILM	10K OHM	20%	1/10W	"SYNC"
VR906	1813025004	CARBON FILM	10K OHM	20%	1/10W	"SETUP"
VR907	1813025004	CARBON FILM	10K OHM	20%	1/10W	"BURST"
VR908	1813025004	CARBON FILM	10K OHM	20%	1/10W	"LUMINANCE"
VR909	1813025004	CARBON FILM	10K OHM	20%	1/10W	"CHROMINANCE"
-CAPACITORS-						
C1	2110101009	MICA	100PF	10%	50V	
C2	2120101006	MICA	100PF	10%	500V	
C3	2120101006	MICA	100PF	10%	500V	
C4	2120101006	MICA	100PF	10%	500V	
C7	2460479007	ELECTROLYTIC	4.7UF	20%	25V	
C8	2460479007	ELECTROLYTIC	4.7UF	20%	25V	
C9	2460479007	ELECTROLYTIC	4.7UF	20%	25V	
C12	2460479007	ELECTROLYTIC	4.7UF	20%	25V	
C14	2460479007	ELECTROLYTIC	4.7UF	20%	25V	
C16	2460479007	ELECTROLYTIC	4.7UF	20%	25V	
C17	2460479007	ELECTROLYTIC	4.7UF	20%	25V	
C18	2460479007	ELECTROLYTIC	4.7UF	20%	25V	
C19	2460479007	ELECTROLYTIC	4.7UF	20%	25V	
C20	2460479007	ELECTROLYTIC	4.7UF	20%	25V	
C21	2460479007	ELECTROLYTIC	4.7UF	20%	25V	
C22	2460479007	ELECTROLYTIC	4.7UF	20%	25V	
C23	2460479007	ELECTROLYTIC	4.7UF	20%	25V	
C24	2460479007	ELECTROLYTIC	4.7UF	20%	25V	

No.	LDR PT No.	DESCRIPTION			
(M.FRAME CONT'D)					
C26	2460479007	ELECTROLYTIC	4.7UF	20%	25V
C27	2460479007	ELECTROLYTIC	4.7UF	20%	25V
C28	2460479007	ELECTROLYTIC	4.7UF	20%	25V
C29	2460479007	ELECTROLYTIC	4.7UF	20%	25V
C30	2460479007	ELECTROLYTIC	4.7UF	20%	25V
C31	2460479007	ELECTROLYTIC	4.7UF	20%	25V
C32	2120330001	MICA	33PF	10%	500V
C33	2120470016	MICA	47PF	10%	500V
C34	2120390009	MICA	39PF	10%	500V
C35	2110151004	MICA	150PF	10%	50V
C50	2140472014	PLASTIC FILM	4700PF	10%	50V
C51	2140222002	PLASTIC FILM	2200PF	10%	50V
C52	2460479007	ELECTROLYTIC	4.7UF	20%	25V
C53	2460479007	ELECTROLYTIC	4.7UF	20%	25V
C54	2150105023	PLASTIC FILM	1UF	10%	100V
C55	2150564007	PLASTIC FILM	0.56UF	10%	100V
C56	2010103005	CERAMIC	0.01UF		50V
C101	2460479007	ELECTROLYTIC	4.7UF	20%	25V
C102	2460479007	ELECTROLYTIC	4.7UF	20%	25V
C103	2460479007	ELECTROLYTIC	4.7UF	20%	25V
C104	2460109004	ELECTROLYTIC	1UF	20%	25V
C107	2460479007	ELECTROLYTIC	4.7UF	20%	25V
C108	2460479007	ELECTROLYTIC	4.7UF	20%	25V
C110	2460479007	ELECTROLYTIC	4.7UF	20%	25V
C111	2460479007	ELECTROLYTIC	4.7UF	20%	25V
C112	2010103005	CERAMIC	0.01UF		50V
C113	2120070001	MICA	7PF		500V
C114	2120330001	MICA	33PF	10%	500V
C201	2140562015	PLASTIC FILM	5600PF	10%	50V
C202	2120470016	MICA	47PF	10%	500V
C301	2110101009	MICA	100PF	10%	50V
C302	2460479007	ELECTROLYTIC	4.7UF	20%	25V
C303	2460479007	ELECTROLYTIC	4.7UF	20%	25V
C304	2060181000	CERAMIC	180PF	10%	50V
C305	2060181000	CERAMIC	180PF	10%	50V
C306	2010103005	CERAMIC	0.01UF		50V
C307	2060221006	CERAMIC	220PF	10%	50V
C308	2110101009	MICA	100PF	10%	50V
C309	2460479007	ELECTROLYTIC	4.7UF	20%	25V
C310	2010103005	CERAMIC	0.01UF		50V
C311	2010103005	CERAMIC	0.01UF		50V
C312	2010103005	CERAMIC	0.01UF		50V
C313	2460479007	ELECTROLYTIC	4.7UF	20%	25V
C401	2140472014	PLASTIC FILM	4700PF	10%	50V
C402	2140183008	PLASTIC FILM	0.018UF	10%	50V
C403	2140104015	PLASTIC FILM	0.1UF	10%	50V
C404	2110101009	MICA	100PF	10%	50V
C405	2110101009	MICA	100PF	10%	50V
C406	2060221006	CERAMIC	220PF	10%	50V
C407	2060121002	CERAMIC	120PF	10%	50V
C408	2460479007	ELECTROLYTIC	4.7UF	20%	25V
C409	2110101009	MICA	100PF	10%	50V
C410	2140102011	PLASTIC FILM	1000PF	10%	50V
C411	2010103005	CERAMIC	0.01UF		50V
C412	2110151004	MICA	150PF	10%	50V
C413	2060221006	CERAMIC	220PF	10%	50V
C414	2060121002	CERAMIC	120PF	10%	50V

No.	LDR PT No.	DESCRIPTION			
(M.FRAME CONT'D)					
C415	2460479007	ELECTROLYTIC	4.7UF	20%	25V
C416	2110101009	MICA	100PF	10%	50V
C417	2120220004	MICA	22PF	10%	500V
C418	2120220004	MICA	22PF	10%	500V
C419	2120220004	MICA	22PF	10%	500V
C420	2120220004	MICA	22PF	10%	500V
C421	2120470016	MICA	47PF	10%	500V
C424	2140102011	PLASTIC FILM	1000PF	10%	50V
C425	2010473008	CERAMIC	0.047UF		50V
C425	2140563017	PLASTIC FILM	0.056UF	10%	50V
C426	2120100004	MICA	10PF	10%	500V
C427	2430330002	ELECTROLYTIC	33UF	20%	10V
C428	2430330002	ELECTROLYTIC	33UF	20%	10V
C430	2460109004	ELECTROLYTIC	1UF	20%	25V
C431	2460109004	ELECTROLYTIC	1UF	20%	25V
C432	2440220002	ELECTROLYTIC	22UF	20%	16V
C433	2440220002	ELECTROLYTIC	22UF	20%	16V
C434	2460109004	ELECTROLYTIC	1UF	20%	25V
C651	2150105023	PLASTIC FILM	1UF	10%	100V
C652	2120470016	MICA	47PF	10%	500V
C653	2460159009	ELECTROLYTIC	1.5UF	20%	25V
C654	2470478002	ELECTROLYTIC	0.47UF	20%	35V
C655	2010103005	CERAMIC	0.01UF		50V
C663	2460479007	ELECTROLYTIC	4.7UF	20%	25V
C664	2460479007	ELECTROLYTIC	4.7UF	20%	25V
C665	2460479007	ELECTROLYTIC	4.7UF	20%	25V
C666	2460479007	ELECTROLYTIC	4.7UF	20%	25V
C667	2460479007	ELECTROLYTIC	4.7UF	20%	25V
C701	2140104015	PLASTIC FILM	0.1UF	10%	50V
C702	2240470009	ELECTROLYTIC	47UF	20%	25V
C703	2240470009	ELECTROLYTIC	47UF	20%	25V
C704	2010103005	CERAMIC	0.01UF		50V
C705	2460479007	ELECTROLYTIC	4.7UF	20%	25V
C706	2240470009	ELECTROLYTIC	47UF	20%	25V
C707	2240470009	ELECTROLYTIC	47UF	20%	25V
C708	2240470009	ELECTROLYTIC	47UF	20%	25V
C709	2240470009	ELECTROLYTIC	47UF	20%	25V
C710	2240470009	ELECTROLYTIC	47UF	20%	25V
C711	2240470009	ELECTROLYTIC	47UF	20%	25V
C712	2240470009	ELECTROLYTIC	47UF	20%	25V
C713	2240470009	ELECTROLYTIC	47UF	20%	25V
C714	2060270009	CERAMIC	27PF	5%	50V
C715	2060270009	CERAMIC	27PF	5%	50V
C716	2060150009	CERAMIC	15PF	5%	50V
C717	2240470009	ELECTROLYTIC	47UF	20%	25V
C718	2240470009	ELECTROLYTIC	47UF	20%	25V
C719	2240470009	ELECTROLYTIC	47UF	20%	25V
C751	2460479007	ELECTROLYTIC	4.7UF	20%	25V
C752	2060820008	CERAMIC	82PF	10%	50V
C753	2060221006	CERAMIC	220PF	10%	50V
C754	2010103005	CERAMIC	0.01UF		50V
C755	2460479007	ELECTROLYTIC	4.7UF	20%	25V
C756	2460479007	ELECTROLYTIC	4.7UF	20%	25V
C757	2460479007	ELECTROLYTIC	4.7UF	20%	25V
C759	2120680008	MICA	68PF	10%	500V
C801	2460479007	ELECTROLYTIC	4.7UF	20%	25V
C802	2460100006	ELECTROLYTIC	10UF	20%	25V

No.	LDR PT No.	DESCRIPTION			
(M.FRAME CONT'D)					
C803	2110101009	MICA	100PF	10%	50V
C804	2110101009	MICA	100PF	10%	50V
C805	2010103005	CERAMIC	0.01UF		50V
C806	2110101009	MICA	100PF	10%	50V
C807	2110101009	MICA	100PF	10%	50V
C808	2010103005	CERAMIC	0.01UF		50V
C809	2010103005	CERAMIC	0.01UF		50V
C810	2010103005	CERAMIC	0.01UF		50V
C811	2120330001	MICA	33PF	10%	500V
C812	2110471002	MICA	470PF	10%	50V
C813	2460479007	ELECTROLYTIC	4.7UF	20%	25V
C814	2110221009	MICA	220PF	10%	50V
C815	2140103004	PLASTIC FILM	0.01UF	5%	50V
C816	2140103004	PLASTIC FILM	0.01UF	5%	50V
C817	2460229004	ELECTROLYTIC	2.2UF	20%	25V
C818	2460229004	ELECTROLYTIC	2.2UF	20%	25V
C819	2140104015	PLASTIC FILM	0.1UF	10%	50V
C820	2010103005	CERAMIC	0.01UF		50V
C821	2010103005	CERAMIC	0.01UF		50V
C822	2460479007	ELECTROLYTIC	4.7UF	20%	25V
C823	2460479007	ELECTROLYTIC	4.7UF	20%	25V
C824	2460479007	ELECTROLYTIC	4.7UF	20%	25V
C851	2050050008	CERAMIC	5PF	0.5PF	50V
C852	2060150009	CERAMIC	15PF	5%	50V
C853	2060470007	CERAMIC	47PF	10%	50V
C854	2060220004	CERAMIC	22PF	10%	50V
C855	2010103005	CERAMIC	0.01UF		50V
C856	2050050008	CERAMIC	5PF	0.5PF	50V
C857	2060270009	CERAMIC	27PF	5%	50V
C858	2010103005	CERAMIC	0.01UF		50V
C859	2060470007	CERAMIC	47PF	10%	50V
C860	2060220004	CERAMIC	22PF	10%	50V
C861	2010103005	CERAMIC	0.01UF		50V
C862	2010103005	CERAMIC	0.01UF		50V
C863	2010103005	CERAMIC	0.01UF		50V
C865	2010103005	CERAMIC	0.01UF		50V
C866	2010103005	CERAMIC	0.01UF		50V
C867	2010103005	CERAMIC	0.01UF		50V
C868	2010103005	CERAMIC	0.01UF		50V
C869	2440220002	ELECTROLYTIC	22UF	20%	16V
C871	2120330001	MICA	33PF	10%	500V
C872	2020102000	CERAMIC	1000PF		500V
C873	2120330001	MICA	33PF	10%	500V
C874	2010103005	CERAMIC	0.01UF		50V
C875	2120330001	MICA	33PF	10%	500V
C876	2050050008	CERAMIC	5PF	0.5PF	50V
C877	2050050008	CERAMIC	5PF	0.5PF	50V
C878	2010103005	CERAMIC	0.01UF		50V
C879	2010103005	CERAMIC	0.01UF		50V
C880	2010103005	CERAMIC	0.01UF		50V
C881	2010103005	CERAMIC	0.01UF		50V
C901	2460479007	ELECTROLYTIC	4.7UF	20%	25V
C902	2460479007	ELECTROLYTIC	4.7UF	20%	25V
C951	2240222000	ELECTROLYTIC	2200UF	20%	25V
C952	2250109001	ELECTROLYTIC	1UF	20%	50V
C953	2240222000	ELECTROLYTIC	2200UF	20%	25V
C954	2250109001	ELECTROLYTIC	1UF	20%	50V

No.	LDR PT No.	DESCRIPTION			
(M.FRAME CONT'D)					
C955	2250102007	ELECTROLYTIC	1000UF	20%	50V
C956	2250109001	ELECTROLYTIC	1UF	20%	50V
C957	2250102007	ELECTROLYTIC	1000UF	20%	50V
C959	2240100006	ELECTROLYTIC	10UF	20%	25V
C960	2240100006	ELECTROLYTIC	10UF	20%	25V
C961	2240100006	ELECTROLYTIC	10UF	20%	25V
C963	2240222000	ELECTROLYTIC	2200UF	20%	25V
C964	2250102007	ELECTROLYTIC	1000UF	20%	50V
C109A	2460100006	ELECTROLYTIC	10UF	20%	25V
C109B	2460100006	ELECTROLYTIC	10UF	20%	25V
-VARIABLE CAPACITORS-					
VC105	2910027007	CERAMIC	1.5-5.5PF	250V	
VC401	2910019008	CERAMIC	2.5-10PF	250V	
VC402	2910019008	CERAMIC	2.5-10PF	250V	
VC701	2910019008	CERAMIC	2.5-10PF	250V	
VC851	2910019008	CERAMIC	2.5-10PF	250V	
VC852	2910019008	CERAMIC	2.5-10PF	250V	
-TRANSISTORS-					
Q50	3030752005	NPN	2SC752(G)TM-0		
Q51	3011015003	PNP	2SA1015-0 or Y		
Q52	3011015003	PNP	2SA1015-0 or Y		
Q53	3011015003	PNP	2SA1015-0 or Y		
Q54	3011015003	PNP	2SA1015-0 or Y		
Q55	3030752005	NPN	2SC752(G)TM-0		
Q56	3030752005	NPN	2SC752(G)TM-0		
Q57	3030752005	NPN	2SC752(G)TM-0		
Q58	3031815009	NPN	2SC1815-0 or Y		
Q59	3011015003	PNP	2SA1015-0 or Y		
Q60	3011015003	PNP	2SA1015-0 or Y		
Q61	3011015003	PNP	2SA1015-0 or Y		
Q62	3011015003	PNP	2SA1015-0 or Y		
Q63	3011015003	PNP	2SA1015-0 or Y		
Q64	3011015003	PNP	2SA1015-0 or Y		
Q65	3011015003	PNP	2SA1015-0 or Y		
Q66	3030752005	NPN	2SC752(G)TM-0		
Q67	3011015003	PNP	2SA1015-0 or Y		
Q68	3011015003	PNP	2SA1015-0 or Y		
Q69	3011015003	PNP	2SA1015-0 or Y		
Q70	3011015003	PNP	2SA1015-0 or Y		
Q71	3030752005	NPN	2SC752(G)TM-0		
Q72	3030752005	NPN	2SC752(G)TM-0		
Q73	3030752005	NPN	2SC752(G)TM-0		
Q74	3031815009	NPN	2SC1815-0 or Y		
Q75	3011015003	PNP	2SA1015-0 or Y		
Q76	3030752005	NPN	2SC752(G)TM-0		
Q101	3011015003	PNP	2SA1015-0 or Y		
Q102	3011015003	PNP	2SA1015-0 or Y		
Q103	3011015003	PNP	2SA1015-0 or Y		
Q104	3011015003	PNP	2SA1015-0 or Y		
Q105	3011015003	PNP	2SA1015-0 or Y		
Q106	3011015003	PNP	2SA1015-0 or Y		
Q107	3011015003	PNP	2SA1015-0 or Y		
Q108	3011015003	PNP	2SA1015-0 or Y		
Q109	3011015003	PNP	2SA1015-0 or Y		
Q110	3011015003	PNP	2SA1015-0 or Y		

No.	LDR PT No.	DESCRIPTION	
(M.FRAME CONT'D)			
Q111	3011015003	PNP	2SA1015-O or Y
Q112	3011015003	PNP	2SA1015-O or Y
Q113	3011015003	PNP	2SA1015-O or Y
Q114	3031815009	NPN	2SC1815-O or Y
Q115	3031815009	NPN	2SC1815-O or Y
Q116	3031815009	NPN	2SC1815-O or Y
Q117	3011015003	PNP	2SA1015-O or Y
Q118	3031815009	NPN	2SC1815-O or Y
Q122	3031815009	NPN	2SC1815-O or Y
Q123	3010495007	PNP	2SA495(G)TM-O
Q124	3031815009	NPN	2SC1815-O or Y
Q125	3031815009	NPN	2SC1815-O or Y
Q126	3031815009	NPN	2SC1815-O or Y
Q127	3011015003	PNP	2SA1015-O or Y
Q128	3031815009	NPN	2SC1815-O or Y
Q129	3011015003	PNP	2SA1015-O or Y
Q130	3011015003	PNP	2SA1015-O or Y
Q131	3011015003	PNP	2SA1015-O or Y
Q131	3031815009	NPN	2SC1815-O or Y
Q132	3011015003	PNP	2SA1015-O or Y
Q201	3030752005	NPN	2SC752(G)TM-O
Q202	3030752005	NPN	2SC752(G)TM-O
Q301	3011015003	PNP	2SA1015-O or Y
Q302	3011015003	PNP	2SA1015-O or Y
Q303	3011015003	PNP	2SA1015-O or Y
Q304	3011015003	PNP	2SA1015-O or Y
Q305	3011015003	PNP	2SA1015-O or Y
Q306	3011015003	PNP	2SA1015-O or Y
Q307	3011015003	PNP	2SA1015-O or Y
Q308	3011015003	PNP	2SA1015-O or Y
Q309	3011015003	PNP	2SA1015-O or Y
Q310	3011015003	PNP	2SA1015-O or Y
Q311	3011015003	PNP	2SA1015-O or Y
Q312	3011015003	PNP	2SA1015-O or Y
Q313	3011015003	PNP	2SA1015-O or Y
Q314	3031815009	NPN	2SC1815-O or Y
Q315	3031815009	NPN	2SC1815-O or Y
Q401	3011015003	PNP	2SA1015-O or Y
Q402	3031815009	NPN	2SC1815-O or Y
Q403	3031815009	NPN	2SC1815-O or Y
Q404	3031815009	NPN	2SC1815-O or Y
Q405	3030752005	NPN	2SC752(G)TM-O
Q406	3011015003	PNP	2SA1015-O or Y
Q407	3011015003	PNP	2SA1015-O or Y
Q408	3011015003	PNP	2SA1015-O or Y
Q409	3011015003	PNP	2SA1015-O or Y
Q410	3050030010	FET	2SK30A-Y
Q411	3031815009	NPN	2SC1815-O or Y
Q412	3031815009	NPN	2SC1815-O or Y
Q413	3030752005	NPN	2SC752(G)TM-O
Q414	3031815009	NPN	2SC1815-O or Y
Q651	3031815009	NPN	2SC1815-O or Y
Q652	3031815009	NPN	2SC1815-O or Y
Q653	3031815009	NPN	2SC1815-O or Y
Q654	3011015003	PNP	2SA1015-O or Y
Q655	3030752005	NPN	2SC752(G)TM-O
Q660	3030752005	NPN	2SC752(G)TM-O

No.	LDR PT No.	DESCRIPTION	
(M.FRAME CONT'D)			
Q665	3031815009	NPN	2SC1815-O or Y
Q666	3011015003	PNP	2SA1015-O or Y
Q667	3033419012	NPN	2SC3419-Y
Q668	3011356018	PNP	2SA1356-Y
Q669	3011015003	PNP	2SA1015-O or Y
Q701	3011015003	PNP	2SA1015-O or Y
Q702	3011015003	PNP	2SA1015-O or Y
Q703	3011015003	PNP	2SA1015-O or Y
Q704	3011015003	PNP	2SA1015-O or Y
Q705	3031815009	NPN	2SC1815-O or Y
Q706	3030752005	NPN	2SC752(G)TM-O
Q707	3030752005	NPN	2SC752(G)TM-O
Q708	3030752005	NPN	2SC752(G)TM-O
Q709	3030752005	NPN	2SC752(G)TM-O
Q710	3011356018	PNP	2SA1356-Y
Q711	3033419012	NPN	2SC3419-Y
Q712	3011356018	PNP	2SA1356-Y
Q713	3033419012	NPN	2SC3419-Y
Q714	3011356018	PNP	2SA1356-Y
Q715	3033419012	NPN	2SC3419-Y
Q716	3011356018	PNP	2SA1356-Y
Q717	3033419012	NPN	2SC3419-Y
Q718	3011356018	PNP	2SA1356-Y
Q719	3033419012	NPN	2SC3419-Y
Q720	3011356018	PNP	2SA1356-Y
Q721	3030752005	NPN	2SC752(G)TM-O
Q722	3011015003	PNP	2SA1015-O or Y
Q723	3031815009	NPN	2SC1815-O or Y
Q751	3031815009	NPN	2SC1815-O or Y
Q752	3011015003	PNP	2SA1015-O or Y
Q753	3033419012	NPN	2SC3419-Y
Q754	3011015003	PNP	2SA1015-O or Y
Q755	3031815009	NPN	2SC1815-O or Y
Q756	3031815009	NPN	2SC1815-O or Y
Q757	3011015003	PNP	2SA1015-O or Y
Q758	3011015003	PNP	2SA1015-O or Y
Q801	3031815009	NPN	2SC1815-O or Y
Q802	3011015003	PNP	2SA1015-O or Y
Q803	3030752005	NPN	2SC752(G)TM-O
Q804	3050033016	FET	2SK33-E
Q805	3031815009	NPN	2SC1815-O or Y
Q806	3011015003	PNP	2SA1015-O or Y
Q807	3031815009	NPN	2SC1815-O or Y
Q808	3011015003	PNP	2SA1015-O or Y
Q809	3011015003	PNP	2SA1015-O or Y
Q810	3050030001	FET	2SK30A-GR
Q851	3031215005	NPN	2SC1215-T
Q852	3031215005	NPN	2SC1215-T
Q853	3031215005	NPN	2SC1215-T
Q854	3031215005	NPN	2SC1215-T
Q855	3031215005	NPN	2SC1215-T
Q856	3031215005	NPN	2SC1215-T
Q857	3011015003	PNP	2SA1015-O or Y
Q858	3031815009	NPN	2SC1815-O or Y
Q859	3031215005	NPN	2SC1215-T
Q860	3031215005	NPN	2SC1215-T
Q901	3011015003	PNP	2SA1015-O or Y

No.	LDR PT No.	DESCRIPTION		
(M.FRAME CONT'D)				
Q902	3031815009	NPN	2SC1815-O or Y	
Q903	3033419012	NPN	2SC3419-Y	
Q904	3011356018	PNP	2SA1356-Y	
Q951	3011015003	PNP	2SA1015-O or Y	
Q952	3031815009	NPN	2SC1815-O or Y	
Q953	3020435006	PNP	2SB435-O	
-DIODES-				
D1	3130005006	LED	SLP-751	
D50	3110006004	DETECTOR	1S1588	
D101	3110006004	DETECTOR	1S1588	
D102	3110006004	DETECTOR	1S1588	
D103	3110006004	DETECTOR	1S1588	
D104	3110006004	DETECTOR	1S1588	
D105	3110006004	DETECTOR	1S1588	
D106	3110006004	DETECTOR	1S1588	
D107	3110006004	DETECTOR	1S1588	
D108	3110006004	DETECTOR	1S1588	
D109	3110006004	DETECTOR	1S1588	
D110	3110006004	DETECTOR	1S1588	
D301	3110006004	DETECTOR	1S1588	
D302	3110006004	DETECTOR	1S1588	
D303	3110006004	DETECTOR	1S1588	
D304	3110006004	DETECTOR	1S1588	
D305	3110006004	DETECTOR	1S1588	
D306	3110006004	DETECTOR	1S1588	
D307	3110006004	DETECTOR	1S1588	
D308	3110006004	DETECTOR	1S1588	
D309	3110006004	DETECTOR	1S1588	
D310	3110006004	DETECTOR	1S1588	
D311	3110006004	DETECTOR	1S1588	
D312	3110006004	DETECTOR	1S1588	
D313	3110006004	DETECTOR	1S1588	
D401	3110006004	DETECTOR	1S1588	
D402	3110006004	DETECTOR	1S1588	
D403	3110006004	DETECTOR	1S1588	
D404	3110006004	DETECTOR	1S1588	
D405	3110006004	DETECTOR	1S1588	
D406	3140019004	VARICAP	ISV68	
D407	3140019004	VARICAP	ISV68	
D408	3110006004	DETECTOR	1S1588	
D408	3110006004	DETECTOR	1S1588	
D409	3110006004	DETECTOR	1S1588	
D701	3110006004	DETECTOR	1S1588	
D702	3110006004	DETECTOR	1S1588	
D703	3110006004	DETECTOR	1S1588	
D704	3110006004	DETECTOR	1S1588	
D705	3110006004	DETECTOR	1S1588	
D706	3110006004	DETECTOR	1S1588	
D707	3110006004	DETECTOR	1S1588	
D708	3110006004	DETECTOR	1S1588	
D709	3110006004	DETECTOR	1S1588	
D710	3110006004	DETECTOR	1S1588	
D711	3110006004	DETECTOR	1S1588	
D712	3110006004	DETECTOR	1S1588	
D713	3110006004	DETECTOR	1S1588	
D714	3110006004	DETECTOR	1S1588	

No.	LDR PT No.	DESCRIPTION		
(M.FRAME CONT'D)				
D715	3110006004	DETECTOR	1S1588	
D716	3110006004	DETECTOR	1S1588	
D751	3110006004	DETECTOR	1S1588	
D752	3110006004	DETECTOR	1S1588	
D801	3140019004	VARICAP	ISV68	
D802	3140019004	VARICAP	ISV68	
D803	3110006004	DETECTOR	1S1588	
D804	3110006004	DETECTOR	1S1588	
D851	3110006004	DETECTOR	1S1588	
D852	3110006004	DETECTOR	1S1588	
D854	3110006004	DETECTOR	1S1588	
D901	3130013005	LED	LN28RP	"SYNC ABSENT"
D902	3130013005	LED	LN28RP	"BURST ABSENT"
D903	3130013005	LED	LN28RP	"SCANNING"
D951	3110021000	RECTIFIER	3BZ61	
D952	3110021000	RECTIFIER	3BZ61	
D953	3110021000	RECTIFIER	3BZ61	
D954	3110021000	RECTIFIER	3BZ61	
D955	3110021000	RECTIFIER	3BZ61	
D956	3110021000	RECTIFIER	3BZ61	
D957	3110021000	RECTIFIER	3BZ61	
D958	3110021000	RECTIFIER	3BZ61	
D959	3110019003	RECTIFIER	1DZ61	
D960	3110019003	RECTIFIER	1DZ61	
D961	3110019003	RECTIFIER	1DZ61	
D962	3110019003	RECTIFIER	1DZ61	
D963	3110019003	RECTIFIER	1DZ61	
D964	3110019003	RECTIFIER	1DZ61	
D965	3110019003	RECTIFIER	1DZ61	
D966	3110019003	RECTIFIER	1DZ61	
D967	3110006004	DETECTOR	1S1588	
-INTEGRATED CIRCUITS-				
IC51	3260008001	TTL	HD74LS08P	
IC101	3260090002	TTL	HD74LS90P	
IC102	3260093008	TTL	HD74LS93P	
IC103	3260093008	TTL	HD74LS93P	
IC104	3260074004	TTL	HD74LS74P	
IC105	3260021003	TTL	HD74LS21P	
IC106	3260021003	TTL	HD74LS21P	
IC107	3260021003	TTL	HD74LS21P	
IC108	3260008001	TTL	HD74LS08P	
IC109	3260002009	TTL	HD74LS02P	
IC110	3260002009	TTL	HD74LS02P	
IC111	3260010008	TTL	HD74LS10P	
IC112	3260002009	TTL	HD74LS02P	
IC113	3260021003	TTL	HD74LS21P	
IC201	3260092006	TTL	HD74LS92P	
IC202	3260092006	TTL	HD74LS92P	
IC203	3260093008	TTL	HD74LS93P	
IC204	3260074004	TTL	HD74LS74P	
IC205	3260020001	TTL	HD74LS20P	
IC206	3260002009	TTL	HD74LS02P	
IC207	3260020001	TTL	HD74LS20P	
IC208	3260002009	TTL	HD74LS02P	
IC209	3260000005	TTL	HD74LS00P	
IC210	3260054008	TTL	HD74LS54P	

No.	LDR PT No.	DESCRIPTION	
(M.FRAME CONT'D)			
IC211	3260002009	TTL	HD74LS02P
IC212	3260027005	TTL	HD74LS27P
IC301	3260010008	TTL	HD74LS10P
IC302	3260000005	TTL	HD74LS00P
IC303	3260020001	TTL	HD74LS20P
IC304	3260000005	TTL	HD74LS00P
IC305	3260161009	TTL	HD74LS161P
IC306	3260161009	TTL	HD74LS161P
IC307	3260074004	TTL	HD74LS74P
IC308	3260093008	TTL	HD74LS93P
IC309	3260221001	TTL	SN74LS221N
IC310	3260027005	TTL	HD74LS27P
IC311	3260086001	TTL	HD74LS86P
IC312	3260021003	TTL	HD74LS21P
IC401	3260090002	TTL	HD74LS90P
IC402	3260093008	TTL	HD74LS93P
IC403	3260093008	TTL	HD74LS93P
IC404	3260074004	TTL	HD74LS74P
IC405	3260010008	TTL	HD74LS10P
IC406	3260000005	TTL	HD74LS00P
IC407	3260086001	TTL	HD74LS86P
IC408	3260002009	TTL	HD74LS02P
IC409	3260000005	TTL	HD74LS00P
IC501	3260008001	TTL	HD74LS08P
IC502	3260002009	TTL	HD74LS02P
IC503	3260000005	TTL	HD74LS00P
IC504	3260032008	TTL	HD74LS32P
IC505	3260020001	TTL	HD74LS20P
IC506	3260008001	TTL	HD74LS08P
IC507	3260074004	TTL	HD74LS74P
IC508	3260074004	TTL	HD74LS74P
IC509	3260027005	TTL	HD74LS27P
IC510	3260074004	TTL	HD74LS74P
IC511	3260074004	TTL	HD74LS74P
IC512	3260008001	TTL	HD74LS08P
IC513	3260002009	TTL	HD74LS02P
IC514	3260008001	TTL	HD74LS08P
IC515	3260002009	TTL	HD74LS02P
IC516	3260002009	TTL	HD74LS02P
IC518	3260008001	TTL	HD74LS08P
IC519	3260008001	TTL	HD74LS08P
IC520	3260010008	TTL	HD74LS10P
IC601	3260002009	TTL	HD74LS02P
IC602	3260161009	TTL	HD74LS161P
IC603	3260122009	TTL	HD74LS122P
IC611	3210741039	OP AMP	MC1741CG
IC612	3210741039	OP AMP	MC1741CG
IC621	3210741039	OP AMP	MC1741CG
IC622	3210741039	OP AMP	MC1741CG
IC623	3211496001	LINEAR	LM1496N
IC624	3211496001	LINEAR	LM1496N
IC625	3270112003	TTL	SN74S112N
IC626	3270112003	TTL	SN74S112N
IC631	3260086001	TTL	HD74LS86P
IC632	3260026003	TTL	HD74LS26P
IC633	3260002009	TTL	HD74LS02P
IC634	3260002009	TTL	HD74LS02P

No.	LDR PT No.	DESCRIPTION		
(M.FRAME CONT'D)				
IC635	3260221001	TTL	SN74LS221N	
IC636	3260221001	TTL	SN74LS221N	
IC637	3260221001	TTL	SN74LS221N	
IC638	3260221001	TTL	SN74LS221N	
IC639	3260026003	TTL	HD74LS26P	
IC651	3260000005	TTL	HD74LS00P	
IC652	3260000005	TTL	HD74LS00P	
IC751	3260000005	TTL	HD74LS00P	
IC801	3210741039	OP AMP	MC1741CG	
IC802	3260074004	TTL	HD74LS74P	
IC803	3260000005	TTL	HD74LS00P	
IC951	3210309000	LINEAR	LM309K	
IC952	3210309000	LINEAR	LM309K	
IC953	3217815007	REGURATOR	HA17815P	+15V
IC954	3210741039	OP AMP	MC1741CG	
-TRANSFORMER-				
T951	3800388003	TRANSFORMER	J-388B	
-COILS-				
L301	3910330007	COIL	33UH	10%
L302	3910220000	COIL	22UH	10%
L401	3900598002	COIL	L-598	
L651	3910390005	COIL	39UH	10%
L701	3910390005	COIL	39UH	10%
L751	3910220000	COIL	22UH	10%
L752	3910330007	COIL	33UH	10%
L801	3900597000	COIL	L-597	
L851	3900755002	COIL	L-755	
L852	3900755002	COIL	L-755	
-SWITCHES-				
S301	4020081006	PUSH	S-8-15	"S301-308, P.selector"
S401	4020105004	PUSH	S-4-31	"S401-402, SYNC"
S601	4030002001	SLIDE	S-22007L,T	
S901	4040006006	LEVER	MSL-2318	"SOUND"
S902	4040006006	LEVER	MSL-2318	"RF CHANNEL"
S903	4040006006	LEVER	MSL-2318	"SCOPE TRIGGER"
S904	4040005004	LEVER	MSL-2217	"SCANNING"
S905	4040005004	LEVER	MSL-2217	"WHITE"
S906	4040005004	LEVER	MSL-2217	"RED"
S907	4040005004	LEVER	MSL-2217	"GREEN"
S908	4040005004	LEVER	MSL-2217	"BLUE"
S909	4040005004	LEVER	MSL-2217	"BURST"
S910	4040005004	LEVER	MSL-2217	"LUMINANCE"
S911	4040005004	LEVER	MSL-2217	"CHROMINANCE"
S912	4040005004	LEVER	MSL-2217	"AMPLITUDE"
	4070101001	DIP	DSS-104	
-FUSE-				
F1	4363535009	TIME LAG	BET 250mA	"200V-240V"
F1	4363550005	TIME LAG	BET 500mA	"100V-120V"

No.	LDR PT No.	DESCRIPTION			
(M.FRAME CONT'D)					
-PC BOARD-					
	5901950013		T-1950C		
	5901951006		T-1951B		
	5901952008		T-1952B		
	5901953037		T-1953C		
	5901954002		T-1954B		
	5901955004		T-1955B		
	5901956006		T-1956B		
	5901957008		T-1957B		
-MISCELLANOUS-					
X401	3500372004	CRYSTAL	TO-5	14.31818MHZ	
X801	3500381005	CRYSTAL	NC-18C	4.5MHZ	
	8040010003	OVEN	PTH460A001		
	8040014001	DBM	M-8 8PIN		
	4322004004	SOCKET	S2-104W		
	4325005004	INLET	NC-173		
	4371002009	FUSE HOLDER	FH-003		
*** VIDEO SWEMAR UNIT 400-01 ***					
-RESISTORS-					
R1	1010472007	CARBON FILM	4.7K OHM	5%	1/4W
R2	1010103006	CARBON FILM	10K OHM	5%	1/4W
R3	1010222004	CARBON FILM	2.2K OHM	5%	1/4W
R4	1010222004	CARBON FILM	2.2K OHM	5%	1/4W
R5	1010222004	CARBON FILM	2.2K OHM	5%	1/4W
R6	1317500002	METAL FILM	750 OHM	1%	1/4W
R7	1010182008	CARBON FILM	1.8K OHM	5%	1/4W
R8	1010221002	CARBON FILM	220 OHM	5%	1/4W
R10	1010221002	CARBON FILM	220 OHM	5%	1/4W
R11	1010330007	CARBON FILM	33 OHM	5%	1/4W
R12	1010221002	CARBON FILM	220 OHM	5%	1/4W
R13	1010821006	CARBON FILM	820 OHM	5%	1/4W
R14	1010222004	CARBON FILM	2.2K OHM	5%	1/4W
R15	1010562008	CARBON FILM	5.6K OHM	5%	1/4W
R16	1010562008	CARBON FILM	5.6K OHM	5%	1/4W
R17	1010471005	CARBON FILM	470 OHM	5%	1/4W
R18	1010471005	CARBON FILM	470 OHM	5%	1/4W
R19	1010102004	CARBON FILM	1K OHM	5%	1/4W
R20	1010101002	CARBON FILM	100 OHM	5%	1/4W
R21	1010221002	CARBON FILM	220 OHM	5%	1/4W
R22	1010101002	CARBON FILM	100 OHM	5%	1/4W
R23	1010472007	CARBON FILM	4.7K OHM	5%	1/4W
R24	1010222004	CARBON FILM	2.2K OHM	5%	1/4W
R25	1010222004	CARBON FILM	2.2K OHM	5%	1/4W
R26	1010103006	CARBON FILM	10K OHM	5%	1/4W
R27	1010472007	CARBON FILM	4.7K OHM	5%	1/4W
R29	1010221002	CARBON FILM	220 OHM	5%	1/4W
R30	1010562008	CARBON FILM	5.6K OHM	5%	1/4W
R31	1010562008	CARBON FILM	5.6K OHM	5%	1/4W
R101	1010272009	CARBON FILM	2.7K OHM	5%	1/4W
R102	1010102004	CARBON FILM	1K OHM	5%	1/4W
R103	1010102004	CARBON FILM	1K OHM	5%	1/4W

No.	LDR PT No.	DESCRIPTION			
(UNIT.-01 CONT'D)					
R104	1311102004	METAL FILM	11K OHM	1%	1/4W
R105	1010682008	CARBON FILM	6.8K OHM	5%	1/4W
R106	1010222004	CARBON FILM	2.2K OHM	5%	1/4W
R107	1010271007	CARBON FILM	270 OHM	5%	1/4W
R108	1010392009	CARBON FILM	3.9K OHM	5%	1/4W
R109	1010390005	CARBON FILM	39 OHM	5%	1/4W
R110	1010330007	CARBON FILM	33 OHM	5%	1/4W
R111	1010470003	CARBON FILM	47 OHM	5%	1/4W
R112	1010820004	CARBON FILM	82 OHM	5%	1/4W
R113	1010330007	CARBON FILM	33 OHM	5%	1/4W
R114	1010101002	CARBON FILM	100 OHM	5%	1/4W
R115	1010121008	CARBON FILM	120 OHM	5%	1/4W
R116	1010331009	CARBON FILM	330 OHM	5%	1/4W
R117	1010471005	CARBON FILM	470 OHM	5%	1/4W
R118	1010102004	CARBON FILM	1K OHM	5%	1/4W
R119	1010222004	CARBON FILM	2.2K OHM	5%	1/4W
R120	1010390005	CARBON FILM	39 OHM	5%	1/4W
R121	1010330007	CARBON FILM	33 OHM	5%	1/4W
R122	1010470003	CARBON FILM	47 OHM	5%	1/4W
R123	1010820004	CARBON FILM	82 OHM	5%	1/4W
R124	1010330007	CARBON FILM	33 OHM	5%	1/4W
R125	1010101002	CARBON FILM	100 OHM	5%	1/4W
R126	1010392009	CARBON FILM	3.9K OHM	5%	1/4W
R127	1010471005	CARBON FILM	470 OHM	5%	1/4W
R128	1010101002	CARBON FILM	100 OHM	5%	1/4W
R129	1010472007	CARBON FILM	4.7K OHM	5%	1/4W
R130	1010101002	CARBON FILM	100 OHM	5%	1/4W
R131	1010472007	CARBON FILM	4.7K OHM	5%	1/4W
R132	1010472007	CARBON FILM	4.7K OHM	5%	1/4W
R133	1010682008	CARBON FILM	6.8K OHM	5%	1/4W
R134	1010102004	CARBON FILM	1K OHM	5%	1/4W
R137	1010152009	CARBON FILM	1.5K OHM	5%	1/4W
R138	1010101002	CARBON FILM	100 OHM	5%	1/4W
R139	1010101002	CARBON FILM	100 OHM	5%	1/4W
R140	1010472007	CARBON FILM	4.7K OHM	5%	1/4W
R141	1010103006	CARBON FILM	10K OHM	5%	1/4W
R142	1010101002	CARBON FILM	100 OHM	5%	1/4W
R143	1010332001	CARBON FILM	3.3K OHM	5%	1/4W
R144	1010331009	CARBON FILM	330 OHM	5%	1/4W
R145	1010470003	CARBON FILM	47 OHM	5%	1/4W
R146	1010332001	CARBON FILM	3.3K OHM	5%	1/4W
R147	1010470003	CARBON FILM	47 OHM	5%	1/4W
R148	1010472007	CARBON FILM	4.7K OHM	5%	1/4W
R149	1010681006	CARBON FILM	680 OHM	5%	1/4W
R150	1010123002	CARBON FILM	12K OHM	5%	1/4W
R151	1010152009	CARBON FILM	1.5K OHM	5%	1/4W
R152	1010222004	CARBON FILM	2.2K OHM	5%	1/4W
R153	1010101002	CARBON FILM	100 OHM	5%	1/4W
R154	1010331009	CARBON FILM	330 OHM	5%	1/4W
R155	1010101002	CARBON FILM	100 OHM	5%	1/4W
R156	1010101002	CARBON FILM	100 OHM	5%	1/4W
R157	1010472007	CARBON FILM	4.7K OHM	5%	1/4W
R158	1010101002	CARBON FILM	100 OHM	5%	1/4W
R159	1010100000	CARBON FILM	10 OHM	5%	1/4W
R160	1010100000	CARBON FILM	10 OHM	5%	1/4W
R202	1010472007	CARBON FILM	4.7K OHM	5%	1/4W
R203	1010103006	CARBON FILM	10K OHM	5%	1/4W

No.	LDR PT No.	DESCRIPTION				
(UNIT.-01 CONT'D)						
R204	1010103006	CARBON FILM	10K OHM	5%	1/4W	
R205	1010103006	CARBON FILM	10K OHM	5%	1/4W	
R206	1010103006	CARBON FILM	10K OHM	5%	1/4W	
R207	1010103006	CARBON FILM	10K OHM	5%	1/4W	
R208	1010103006	CARBON FILM	10K OHM	5%	1/4W	
R209	1010103006	CARBON FILM	10K OHM	5%	1/4W	
R210	1010103006	CARBON FILM	10K OHM	5%	1/4W	
R211	1010222004	CARBON FILM	2.2K OHM	5%	1/4W	
R212	1010102004	CARBON FILM	1K OHM	5%	1/4W	
R213	1010472007	CARBON FILM	4.7K OHM	5%	1/4W	
R214	1010103006	CARBON FILM	10K OHM	5%	1/4W	
R215	1010153001	CARBON FILM	15K OHM	5%	1/4W	
R216	1010104008	CARBON FILM	100K OHM	5%	1/4W	
R401	1010472007	CARBON FILM	4.7K OHM	5%	1/4W	
R402	1010472007	CARBON FILM	4.7K OHM	5%	1/4W	
R403	1010103006	CARBON FILM	10K OHM	5%	1/4W	
R404	1010101002	CARBON FILM	100 OHM	5%	1/4W	
R405	1010103006	CARBON FILM	10K OHM	5%	1/4W	
R406	1010103006	CARBON FILM	10K OHM	5%	1/4W	
R407	1010103006	CARBON FILM	10K OHM	5%	1/4W	
R408	1010103006	CARBON FILM	10K OHM	5%	1/4W	
R409	1010474001	CARBON FILM	470K OHM	5%	1/4W	
R409	1315101006	METAL FILM	5.1K OHM	1%	1/4W	
R410	1010222004	CARBON FILM	2.2K OHM	5%	1/4W	
R411	1010102004	CARBON FILM	1K OHM	5%	1/4W	
R412	1010222004	CARBON FILM	2.2K OHM	5%	1/4W	
R414	1010221002	CARBON FILM	220 OHM	5%	1/4W	
R501	1010271007	CARBON FILM	270 OHM	5%	1/4W	
R502	1010561006	CARBON FILM	560 OHM	5%	1/4W	
R503	1010271007	CARBON FILM	270 OHM	5%	1/4W	
R504	1010101002	CARBON FILM	100 OHM	5%	1/4W	
R505	1010472007	CARBON FILM	4.7K OHM	5%	1/4W	
R506	1010101002	CARBON FILM	100 OHM	5%	1/4W	
R507	1010332001	CARBON FILM	3.3K OHM	5%	1/4W	
R508	1010101002	CARBON FILM	100 OHM	5%	1/4W	
-VARIABLE RESISTORS-						
VR1	1712007008	METAL FILM	2.2K OHM	25%	1/2W	
VR101	1712007008	METAL FILM	2.2K OHM	25%	1/2W	
VR401	1712010007	METAL FILM	10K OHM	25%	1/2W	
VR402	1712010007	METAL FILM	10K OHM	25%	1/2W	
VR403	1712010007	METAL FILM	10K OHM	25%	1/2W	
VR404	1712005004	METAL FILM	470 OHM	25%	1/2W	
VR501	1813024002	CARBON FILM	10K OHM	20%	1/10W	"SWEEP STOP"
VR502	1813024002	CARBON FILM	10K OHM	20%	1/10W	"SWEEP START"
VR503	1813026006	CARBON FILM	500 OHM	20%	1/10W	"VARIABLE"
-CAPACITORS-						
C1	2010103005	CERAMIC	0.01UF		50V	
C3	2460479007	ELECTROLYTIC	4.7UF	20%	25V	
C4	2120020006	MICA	2PF		500V	
C5	2460479007	ELECTROLYTIC	4.7UF	20%	25V	
C6	2110101009	MICA	100PF	10%	50V	
C7	2460479007	ELECTROLYTIC	4.7UF	20%	25V	
C9	2120680008	MICA	68PF	10%	500V	
C10	2460479007	ELECTROLYTIC	4.7UF	20%	25V	
C11	2460479007	ELECTROLYTIC	4.7UF	20%	25V	

No.	LDR PT No.	DESCRIPTION			
(UNIT.-01 CONT'D)					
C12	2120050005	MICA	5PF		500V
C102	2460479007	ELECTROLYTIC	4.7UF	20%	25V
C103	2460479007	ELECTROLYTIC	4.7UF	20%	25V
C104	2460479007	ELECTROLYTIC	4.7UF	20%	25V
C105	2010103005	CERAMIC	0.01UF		50V
C107	2120470016	MICA	47PF	10%	500V
C108	2460479007	ELECTROLYTIC	4.7UF	20%	25V
C109	2010103005	CERAMIC	0.01UF		50V
C110	2010103005	CERAMIC	0.01UF		50V
C201	2460479007	ELECTROLYTIC	4.7UF	20%	25V
C202	2460479007	ELECTROLYTIC	4.7UF	20%	25V
C203	2460479007	ELECTROLYTIC	4.7UF	20%	25V
C204	2460479007	ELECTROLYTIC	4.7UF	20%	25V
C205	2120820008	MICA	82PF	10%	500V
C206	2460479007	ELECTROLYTIC	4.7UF	20%	25V
C207	2140102011	PLASTIC FILM	1000PF	10%	50V
C208	2460479007	ELECTROLYTIC	4.7UF	20%	25V
C209	2150105023	PLASTIC FILM	1UF	10%	100V
C210	2150105023	PLASTIC FILM	1UF	10%	100V
C211	2150105023	PLASTIC FILM	1UF	10%	100V
C212	2150105023	PLASTIC FILM	1UF	10%	100V
C213	2150105023	PLASTIC FILM	1UF	10%	100V
C215	2140103013	PLASTIC FILM	0.01UF	10%	50V
C216	2140103013	PLASTIC FILM	0.01UF	10%	50V
C217	2140103013	PLASTIC FILM	0.01UF	10%	50V
C218	2140103013	PLASTIC FILM	0.01UF	10%	50V
C219	2140103013	PLASTIC FILM	0.01UF	10%	50V
C220	2140103013	PLASTIC FILM	0.01UF	10%	50V
C401	2460479007	ELECTROLYTIC	4.7UF	20%	25V
C402	2460479007	ELECTROLYTIC	4.7UF	20%	25V
C403	2150105023	PLASTIC FILM	1UF	10%	100V
C501	2460479007	ELECTROLYTIC	4.7UF	20%	25V
C502	2460479007	ELECTROLYTIC	4.7UF	20%	25V
C503	2120470016	MICA	47PF	10%	500V
-TRANSISTORS-					
Q1	3031815009	NPN	2SC1815-O or Y		
Q2	3011015003	PNP	2SA1015-O or Y		
Q3	3010495007	PNP	2SA495(G)TM-O		
Q4	3010495007	PNP	2SA495(G)TM-O		
Q6	3010495007	PNP	2SA495(G)TM-O		
Q7	3031215005	NPN	2SC1215-T		
Q8	3031215005	NPN	2SC1215-T		
Q9	3031815009	NPN	2SC1815-O or Y		
Q10	3011015003	PNP	2SA1015-O or Y		
Q11	3031815009	NPN	2SC1815-O or Y		
Q14	3031815009	NPN	2SC1815-O or Y		
Q17	3090009008	FET	2N3958		
Q101	3031815009	NPN	2SC1815-O or Y		
Q102	3011015003	PNP	2SA1015-O or Y		
Q102	3011015003	PNP	2SA1015-O or Y		
Q103	3011015003	PNP	2SA1015-O or Y		
Q104	3031815009	NPN	2SC1815-O or Y		
Q105	3011015003	PNP	2SA1015-O or Y		
Q106	3031815009	NPN	2SC1815-O or Y		
Q107	3011015003	PNP	2SA1015-O or Y		
Q108	3011015003	PNP	2SA1015-O or Y		

No.	LDR PT No.	DESCRIPTION	
(UNIT.-01 CONT'D)			
Q110	3011015003	PNP	2SA1015-O or Y
Q111	3031815009	NPN	2SC1815-O or Y
Q112	3031815009	NPN	2SC1815-O or Y
Q113	3031215005	NPN	2SC1215-T
Q114	3031215005	NPN	2SC1215-T
Q115	3010495007	PNP	2SA495(G)TM-O
Q116	3031815009	NPN	2SC1815-O or Y
Q117	3033419012	NPN	2SC3419-Y
Q118	3010495007	PNP	2SA495(G)TM-O
Q119	3011356018	PNP	2SA1356-Y
Q201	3030752005	NPN	2SC752(G)TM-O
Q202	3011015003	PNP	2SA1015-O or Y
Q401	3031815009	NPN	2SC1815-O or Y
Q402	3031815009	NPN	2SC1815-O or Y
Q403	3011015003	PNP	2SA1015-O or Y
Q404	3030752005	NPN	2SC752(G)TM-O
Q405	3030752005	NPN	2SC752(G)TM-O
Q406	3011015003	PNP	2SA1015-O or Y
Q407	3011015003	PNP	2SA1015-O or Y
Q408	3031815009	NPN	2SC1815-O or Y
Q501	3011015003	PNP	2SA1015-O or Y
Q502	3031815009	NPN	2SC1815-O or Y
-DIODES-			
D101	3110006004	DETECTOR	1S1588
D102	3110006004	DETECTOR	1S1588
D103	3110015005	SCHOTTKY	1SS16
D104	3110015005	SCHOTTKY	1SS16
D105	3110015005	SCHOTTKY	1SS16
D106	3110015005	SCHOTTKY	1SS16
D107	3110015005	SCHOTTKY	1SS16
D108	3110015005	SCHOTTKY	1SS16
D109	3110015005	SCHOTTKY	1SS16
D110	3110015005	SCHOTTKY	1SS16
D111	3110015005	SCHOTTKY	1SS16
D112	3110015005	SCHOTTKY	1SS16
D113	3110015005	SCHOTTKY	1SS16
D114	3110015005	SCHOTTKY	1SS16
D115	3110006004	DETECTOR	1S1588
D116	3110006004	DETECTOR	1S1588
D117	3110006004	DETECTOR	1S1588
D118	3110006004	DETECTOR	1S1588
D119	3110006004	DETECTOR	1S1588
D120	3110006004	DETECTOR	1S1588
D121	3110006004	DETECTOR	1S1588
D201	3110006004	DETECTOR	1S1588
D202	3110006004	DETECTOR	1S1588
D203	3110006004	DETECTOR	1S1588
D204	3110006004	DETECTOR	1S1588
D205	3110006004	DETECTOR	1S1588
D206	3110006004	DETECTOR	1S1588
D401	3110006004	DETECTOR	1S1588
D402	3110006004	DETECTOR	1S1588
D403	3110006004	DETECTOR	1S1588
D404	3110006004	DETECTOR	1S1588

No.	LDR PT No.	DESCRIPTION		
(UNIT.-01 CONT'D)				
-INTEGRATED CIRCUITS-				
IC1	3210741075	OP AMP		MC1741CP1
IC2	3211458021	OP AMP		MC1458CP1
IC201	3260000005	TTL		HD74LS00P
IC202	3260092006	TTL		HD74LS92P
IC203	3260151006	TTL		HD74LS151P
IC204	3260090002	TTL		HD74LS90P
IC205	3260027005	TTL		HD74LS27P
IC206	3260074004	TTL		HD74LS74P
IC207	3310109000	CMOS		MSM40109
IC208	3250121000	TTL		SN74121
IC209	3310051005	CMOS		TC4051BP
IC210	3210741075	OP AMP		MC1741CP1
IC211	3213240008	OP AMP		CA3240E
IC212	3213240008	OP AMP		CA3240E
IC213	3213240008	OP AMP		CA3240E
IC401	3211458021	OP AMP		MC1458CP1
IC402	3211458021	OP AMP		MC1458CP1
-SWITCHES-				
S201	4020107008	PUSH	S-6-14	"S201-206, M.FREQ"
S501	4040006006	LEVER	MSL-2318	"SWEEP SIGNAL LEVEL"
-PC BOARD-				
	5901958000			T-1958B
	5901960007			T-1960A

*** MULTIBURST UNIT 400-02 ***

-RESISTORS-					
R1	1010472007	CARBON FILM	4.7K OHM	5%	1/4W
R2	1010103006	CARBON FILM	10K OHM	5%	1/4W
R3	1010222004	CARBON FILM	2.2K OHM	5%	1/4W
R4	1010222004	CARBON FILM	2.2K OHM	5%	1/4W
R5	1010222004	CARBON FILM	2.2K OHM	5%	1/4W
R6	1317500002	METAL FILM	750 OHM	1%	1/4W
R7	1010182008	CARBON FILM	1.8K OHM	5%	1/4W
R8	1010221002	CARBON FILM	220 OHM	5%	1/4W
R10	1010221002	CARBON FILM	220 OHM	5%	1/4W
R11	1010330007	CARBON FILM	33 OHM	5%	1/4W
R12	1010221002	CARBON FILM	220 OHM	5%	1/4W
R13	1010821006	CARBON FILM	820 OHM	5%	1/4W
R14	1010222004	CARBON FILM	2.2K OHM	5%	1/4W
R15	1010562008	CARBON FILM	5.6K OHM	5%	1/4W
R16	1010562008	CARBON FILM	5.6K OHM	5%	1/4W
R17	1010471005	CARBON FILM	470 OHM	5%	1/4W
R18	1010471005	CARBON FILM	470 OHM	5%	1/4W
R20	1010101002	CARBON FILM	100 OHM	5%	1/4W
R21	1010221002	CARBON FILM	220 OHM	5%	1/4W
R22	1010101002	CARBON FILM	100 OHM	5%	1/4W
R23	1010122000	CARBON FILM	1.2K OHM	5%	1/4W
R24	1010222004	CARBON FILM	2.2K OHM	5%	1/4W
R25	1010222004	CARBON FILM	2.2K OHM	5%	1/4W
R26	1010103006	CARBON FILM	10K OHM	5%	1/4W

No.	LDR PT No.	DESCRIPTION			
(UNIT.-02 CONT'D)					
R27	1010472007	CARBON FILM	4.7K OHM	5%	1/4W
R28	1010472007	CARBON FILM	4.7K OHM	5%	1/4W
R29	1010221002	CARBON FILM	220 OHM	5%	1/4W
R30	1010562008	CARBON FILM	5.6K OHM	5%	1/4W
R31	1010562008	CARBON FILM	5.6K OHM	5%	1/4W
R32	1010222004	CARBON FILM	2.2K OHM	5%	1/4W
R33	1010123002	CARBON FILM	12K OHM	5%	1/4W
R34	1010472007	CARBON FILM	4.7K OHM	5%	1/4W
R35	1010472007	CARBON FILM	4.7K OHM	5%	1/4W
R36	1010474001	CARBON FILM	470K OHM	5%	1/4W
R101	1010272009	CARBON FILM	2.7K OHM	5%	1/4W
R102	1010102004	CARBON FILM	1K OHM	5%	1/4W
R103	1010102004	CARBON FILM	1K OHM	5%	1/4W
R104	1311102004	METAL FILM	11K OHM	1%	1/4W
R105	1010682008	CARBON FILM	6.8K OHM	5%	1/4W
R106	1010222004	CARBON FILM	2.2K OHM	5%	1/4W
R107	1010271007	CARBON FILM	270 OHM	5%	1/4W
R108	1010392009	CARBON FILM	3.9K OHM	5%	1/4W
R109	1010390005	CARBON FILM	39 OHM	5%	1/4W
R110	1010330007	CARBON FILM	33 OHM	5%	1/4W
R111	1010470003	CARBON FILM	47 OHM	5%	1/4W
R112	1010820004	CARBON FILM	82 OHM	5%	1/4W
R113	1010330007	CARBON FILM	33 OHM	5%	1/4W
R114	1010101002	CARBON FILM	100 OHM	5%	1/4W
R115	1010121008	CARBON FILM	120 OHM	5%	1/4W
R116	1010331009	CARBON FILM	330 OHM	5%	1/4W
R117	1010471005	CARBON FILM	470 OHM	5%	1/4W
R118	1010102004	CARBON FILM	1K OHM	5%	1/4W
R119	1010222004	CARBON FILM	2.2K OHM	5%	1/4W
R120	1010390005	CARBON FILM	39 OHM	5%	1/4W
R121	1010330007	CARBON FILM	33 OHM	5%	1/4W
R122	1010470003	CARBON FILM	47 OHM	5%	1/4W
R123	1010820004	CARBON FILM	82 OHM	5%	1/4W
R124	1010330007	CARBON FILM	33 OHM	5%	1/4W
R125	1010101002	CARBON FILM	100 OHM	5%	1/4W
R126	1010392009	CARBON FILM	3.9K OHM	5%	1/4W
R127	1010471005	CARBON FILM	470 OHM	5%	1/4W
R128	1010101002	CARBON FILM	100 OHM	5%	1/4W
R129	1010472007	CARBON FILM	4.7K OHM	5%	1/4W
R130	1010101002	CARBON FILM	100 OHM	5%	1/4W
R131	1010472007	CARBON FILM	4.7K OHM	5%	1/4W
R132	1010472007	CARBON FILM	4.7K OHM	5%	1/4W
R133	1010682008	CARBON FILM	6.8K OHM	5%	1/4W
R134	1010471005	CARBON FILM	470 OHM	5%	1/4W
R135	1010471005	CARBON FILM	470 OHM	5%	1/4W
R137	1010152009	CARBON FILM	1.5K OHM	5%	1/4W
R138	1010101002	CARBON FILM	100 OHM	5%	1/4W
R139	1010101002	CARBON FILM	100 OHM	5%	1/4W
R140	1010472007	CARBON FILM	4.7K OHM	5%	1/4W
R141	1010103006	CARBON FILM	10K OHM	5%	1/4W
R142	1010102004	CARBON FILM	1K OHM	5%	1/4W
R143	1010332001	CARBON FILM	3.3K OHM	5%	1/4W
R144	1010331009	CARBON FILM	330 OHM	5%	1/4W
R145	1010470003	CARBON FILM	47 OHM	5%	1/4W
R146	1010332001	CARBON FILM	3.3K OHM	5%	1/4W
R147	1010470003	CARBON FILM	47 OHM	5%	1/4W
R148	1010472007	CARBON FILM	4.7K OHM	5%	1/4W

No.	LDR PT No.	DESCRIPTION			
(UNIT.-02 CONT'D)					
R149	1010681006	CARBON FILM	680 OHM	5%	1/4W
R150	1010123002	CARBON FILM	12K OHM	5%	1/4W
R151	1010152009	CARBON FILM	1.5K OHM	5%	1/4W
R152	1010222004	CARBON FILM	2.2K OHM	5%	1/4W
R153	1010101002	CARBON FILM	100 OHM	5%	1/4W
R154	1010331009	CARBON FILM	330 OHM	5%	1/4W
R155	1010101002	CARBON FILM	100 OHM	5%	1/4W
R156	1010101002	CARBON FILM	100 OHM	5%	1/4W
R157	1010472007	CARBON FILM	4.7K OHM	5%	1/4W
R158	1010101002	CARBON FILM	100 OHM	5%	1/4W
R159	1010100000	CARBON FILM	10 OHM	5%	1/4W
R160	1010100000	CARBON FILM	10 OHM	5%	1/4W
R161	1010472007	CARBON FILM	4.7K OHM	5%	1/4W
R162	1010101002	CARBON FILM	100 OHM	5%	1/4W
R163	1010332001	CARBON FILM	3.3K OHM	5%	1/4W
R164	1010680004	CARBON FILM	68 OHM	5%	1/4W
R165	1010103006	CARBON FILM	10K OHM	5%	1/4W
R166	1010103006	CARBON FILM	10K OHM	5%	1/4W
R201	1010223006	CARBON FILM	22K OHM	5%	1/4W
R202	1010472007	CARBON FILM	4.7K OHM	5%	1/4W
R203	1010472007	CARBON FILM	4.7K OHM	5%	1/4W
R204	1010472007	CARBON FILM	4.7K OHM	5%	1/4W
R205	1010472007	CARBON FILM	4.7K OHM	5%	1/4W
R206	1010472007	CARBON FILM	4.7K OHM	5%	1/4W
R207	1010472007	CARBON FILM	4.7K OHM	5%	1/4W
R208	1010472007	CARBON FILM	4.7K OHM	5%	1/4W
R209	1010103006	CARBON FILM	10K OHM	5%	1/4W
R210	1312401000	METAL FILM	2.4K OHM	1%	1/4W
R211	1315101006	METAL FILM	5.1K OHM	1%	1/4W
R212	1010181006	CARBON FILM	180 OHM	5%	1/4W
R214	1010153001	CARBON FILM	15K OHM	5%	1/4W
R215	1010103006	CARBON FILM	10K OHM	5%	1/4W
R216	1010822008	CARBON FILM	8.2K OHM	5%	1/4W
R217	1010562008	CARBON FILM	5.6K OHM	5%	1/4W
R218	1010472007	CARBON FILM	4.7K OHM	5%	1/4W
R219	1010332001	CARBON FILM	3.3K OHM	5%	1/4W
R220	1010101002	CARBON FILM	100 OHM	5%	1/4W
R221	1010222004	CARBON FILM	2.2K OHM	5%	1/4W
R222	1010102004	CARBON FILM	1K OHM	5%	1/4W
R223	1010153001	CARBON FILM	15K OHM	5%	1/4W
R224	1010683000	CARBON FILM	68K OHM	5%	1/4W
R225	1010682008	CARBON FILM	6.8K OHM	5%	1/4W
R226	1010103006	CARBON FILM	10K OHM	5%	1/4W
R227	1010682008	CARBON FILM	6.8K OHM	5%	1/4W
R228	1010223006	CARBON FILM	22K OHM	5%	1/4W
R229	1010682008	CARBON FILM	6.8K OHM	5%	1/4W
R231	1010562008	CARBON FILM	5.6K OHM	5%	1/4W
R233	1010472007	CARBON FILM	4.7K OHM	5%	1/4W
R235	1010223006	CARBON FILM	22K OHM	5%	1/4W
R236	1010222004	CARBON FILM	2.2K OHM	5%	1/4W
R237	1010102004	CARBON FILM	1K OHM	5%	1/4W
R237	1010221002	CARBON FILM	220 OHM	5%	1/4W

No.	LDR PT No.	DESCRIPTION				
(UNIT.-02 CONT'D)						
-VARIABLE RESISTORS-						
VR1	1712007008	METAL FILM	2.2K OHM	25%	1/2W	
VR2	1712009002	METAL FILM	4.7K OHM	25%	1/2W	
VR101	1712007008	METAL FILM	2.2K OHM	25%	1/2W	
VR201	1813025004	CARBON FILM	10K OHM	20%	1/10W	
VR202	1813027008	CARBON FILM	10K OHM	20%	1/10W	
VR203	1813025004	CARBON FILM	10K OHM	20%	1/10W	
VR204	1813027008	CARBON FILM	10K OHM	20%	1/10W	
VR205	1813025004	CARBON FILM	10K OHM	20%	1/10W	
VR206	1813027008	CARBON FILM	10K OHM	20%	1/10W	
-CAPACITORS-						
C1	2010103005	CERAMIC	0.01UF		50V	
C2	2120220004	MICA	22PF	10%	500V	
C3	2460479007	ELECTROLYTIC	4.7UF	20%	25V	
C4	2120020006	MICA	2PF		500V	
C5	2460479007	ELECTROLYTIC	4.7UF	20%	25V	
C6	2120470016	MICA	47PF	10%	500V	
C9	2120330001	MICA	33PF	10%	500V	
C10	2460479007	ELECTROLYTIC	4.7UF	20%	25V	
C11	2460479007	ELECTROLYTIC	4.7UF	20%	25V	
C101	2120560008	MICA	56PF	10%	500V	
C102	2460479007	ELECTROLYTIC	4.7UF	20%	25V	
C103	2460479007	ELECTROLYTIC	4.7UF	20%	25V	
C104	2460479007	ELECTROLYTIC	4.7UF	20%	25V	
C105	2010103005	CERAMIC	0.01UF		50V	
C106	2120150009	MICA	15PF	10%	500V	
C107	2110271004	MICA	270PF	10%	50V	
C108	2460479007	ELECTROLYTIC	4.7UF	20%	25V	
C109	2010103005	CERAMIC	0.01UF		50V	
C110	2010103005	CERAMIC	0.01UF		50V	
C201	2460479007	ELECTROLYTIC	4.7UF	20%	25V	
C202	2460479007	ELECTROLYTIC	4.7UF	20%	25V	
C203	2120680008	MICA	68PF	10%	500V	
C204	2110271004	MICA	270PF	10%	50V	
C205	2460479007	ELECTROLYTIC	4.7UF	20%	25V	
C206	2010103005	CERAMIC	0.01UF		50V	
C207	2010103005	CERAMIC	0.01UF		50V	
C208	2460479007	ELECTROLYTIC	4.7UF	20%	25V	
C209	2460479007	ELECTROLYTIC	4.7UF	20%	25V	
C210	2460479007	ELECTROLYTIC	4.7UF	20%	25V	
C211	2460479007	ELECTROLYTIC	4.7UF	20%	25V	
C212	2120180008	MICA	18PF	10%	500V	
-TRANSISTORS-						
Q1	3031815009	NPN	2SC1815-O or Y			
Q2	3011015003	PNP	2SA1015-O or Y			
Q3	3010495007	PNP	2SA495(G)TM-O			
Q4	3010495007	PNP	2SA495(G)TM-O			
Q6	3010495007	PNP	2SA495(G)TM-O			
Q7	3031215005	NPN	2SC1215-T			
Q8	3031215005	NPN	2SC1215-T			
Q9	3031815009	NPN	2SC1815-O or Y			
Q10	3011015003	PNP	2SA1015-O or Y			
Q11	3031815009	NPN	2SC1815-O or Y			
Q12	3031815009	NPN	2SC1815-O or Y			

No.	LDR PT No.	DESCRIPTION	
(UNIT.-02 CONT'D)			
Q13	3011015003	PNP	2SA1015-O or Y
Q14	3031815009	NPN	2SC1815-O or Y
Q15	3031815009	NPN	2SC1815-O or Y
Q16	3031815009	NPN	2SC1815-O or Y
Q17	3090009008	FET	2N3958
Q101	3031815009	NPN	2SC1815-O or Y
Q102	3011015003	PNP	2SA1015-O or Y
Q103	3011015003	PNP	2SA1015-O or Y
Q104	3031815009	NPN	2SC1815-O or Y
Q105	3011015003	PNP	2SA1015-O or Y
Q106	3031815009	NPN	2SC1815-O or Y
Q107	3011015003	PNP	2SA1015-O or Y
Q108	3011015003	PNP	2SA1015-O or Y
Q109	3011015003	PNP	2SA1015-O or Y
Q110	3011015003	PNP	2SA1015-O or Y
Q111	3031815009	NPN	2SC1815-O or Y
Q112	3031815009	NPN	2SC1815-O or Y
Q113	3031215005	NPN	2SC1215-T
Q114	3031215005	NPN	2SC1215-T
Q115	3010495007	PNP	2SA495(G)TM-O
Q116	3031815009	NPN	2SC1815-O or Y
Q117	3033419012	NPN	2SC3419-Y
Q118	3010495007	PNP	2SA495(G)TM-O
Q119	3011356018	PNP	2SA1356-Y
Q120	3011015003	PNP	2SA1015-O or Y
Q121	3031815009	NPN	2SC1815-O or Y
Q122	3011015003	PNP	2SA1015-O or Y
Q181	3011015003	PNP	2SA1015-O or Y
Q201	3011015003	PNP	2SA1015-O or Y
Q202	3011015003	PNP	2SA1015-O or Y
Q203	3011015003	PNP	2SA1015-O or Y
Q204	3011015003	PNP	2SA1015-O or Y
Q205	3011015003	PNP	2SA1015-O or Y
Q206	3011015003	PNP	2SA1015-O or Y
Q207	3011015003	PNP	2SA1015-O or Y
Q208	3011015003	PNP	2SA1015-O or Y
Q209	3031815009	NPN	2SC1815-O or Y
Q210	3030752005	NPN	2SC752(G)TM-O
Q211	3030752005	NPN	2SC752(G)TM-O
-DIODES-			
D1	3110006004	DETECTOR	1S1588
D2	3110006004	DETECTOR	1S1588
D3	3110006004	DETECTOR	1S1588
D11	3110006004	DETECTOR	1S1588
D101	3110006004	DETECTOR	1S1588
D102	3110006004	DETECTOR	1S1588
D103	3110015005	SCHOTTKY	1SS16
D104	3110015005	SCHOTTKY	1SS16
D105	3110015005	SCHOTTKY	1SS16
D106	3110015005	SCHOTTKY	1SS16
D107	3110015005	SCHOTTKY	1SS16
D108	3110015005	SCHOTTKY	1SS16
D109	3110015005	SCHOTTKY	1SS16
D110	3110015005	SCHOTTKY	1SS16
D111	3110015005	SCHOTTKY	1SS16
D112	3110015005	SCHOTTKY	1SS16

No.	LDR PT No.	DESCRIPTION	
(UNIT.-02 CONT'D)			
D113	3110015005	SCHOTTKY	1SS16
D114	3110015005	SCHOTTKY	1SS16
D115	3110006004	DETECTOR	1S1588
D116	3110006004	DETECTOR	1S1588
D117	3110006004	DETECTOR	1S1588
D118	3110006004	DETECTOR	1S1588
D120	3110006004	DETECTOR	1S1588
D121	3110006004	DETECTOR	1S1588
D201	3110006004	DETECTOR	1S1588
D202	3110006004	DETECTOR	1S1588
D203	3110006004	DETECTOR	1S1588
D204	3110006004	DETECTOR	1S1588
D205	3110006004	DETECTOR	1S1588
D206	3110006004	DETECTOR	1S1588
D207	3110006004	DETECTOR	1S1588
D208	3110006004	DETECTOR	1S1588
D209	3110006004	DETECTOR	1S1588
-INTEGRATED CIRCUITS-			
IC1	3213140004	OP AMP	CA3140E
IC2	3213240008	OP AMP	CA3240E
IC201	3260123001	TTL	HD74LS123P
IC202	3260002009	TTL	HD74LS02P
IC203	3260002009	TTL	HD74LS02P
IC204	3260027005	TTL	HD74LS27P
IC205	3260074004	TTL	HD74LS74P
IC206	3260002009	TTL	HD74LS02P
IC207	3260000005	TTL	HD74LS00P
IC208	3260090002	TTL	HD74LS90P
IC209	3260011000	TTL	HD74LS11P
IC210	3260093008	TTL	HD74LS93P
IC211	3260151006	TTL	HD74LS151P
IC212	3260138004	TTL	HD74LS138P
IC213	3260000005	TTL	HD74LS00P
IC214	3260000005	TTL	HD74LS00P
-SWITCHES-			
S101	4040005004	LEVER	MSL-2217 "AMPLITUDE"
S201	4020106006	PUSH	S-7-21 "S201-207, BURST FREQ"
-PC BOARD-			
	5901959002		T-1959B
	5902002003		T-2002A

10. CABINET REMOVAL

- Remove the top and bottom covers; six flat head screws fasten each cover to the main frame.

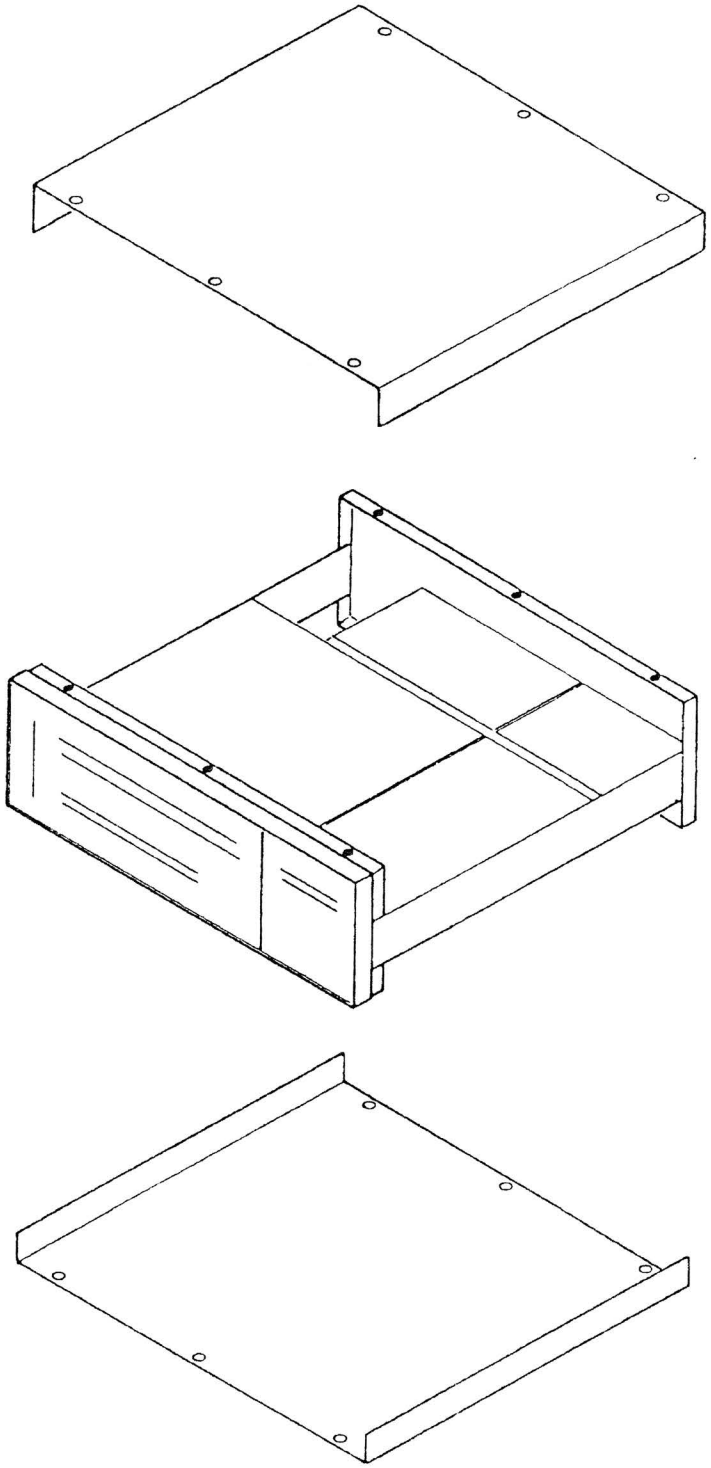

LEADER ELECTRONICS CORP.
2-6-33 TSUNASHIMA-HIGASHI, KOHOKU-KU,
YOKOHAMA, JAPAN.
PHONE : (045) 541-2121
FAX : (045) 544-1280
TELEX : J47780 JPLEADER

Printed in Japan